

21st CENTURY CABINETRY®

PRICE BOOK SPECIFICATION

Quality, Beauty, & Affordability

2026 Edition























Quality
Beauty
Affordability

Contents

P01 INFO

P05 FORMS

P08 DOORS

P12 SPECIFICATION

P13 BASE CABINET

P21 WALL CABINET

P31 TALL CABINET

P34 GLASS DOOR CABINET

P36 VANITY

P39 ACCESSORIES

P51 INSERTS



Product Description and List Price Guide 2026

HIGH QUALITY CABINETRY

Elegant Cabinets To Complement Any Home

Since 2005, 21st Century Cabinetry has been a trusted name for homeowners and professionals seeking to elevate kitchens, bathrooms, and living spaces with beautiful, long-lasting cabinetry. From the beginning, we've understood that quality is not just a feature—it's a foundation. That's why our cabinets are crafted to deliver both style and durability, all at an exceptional value.

Today, we offer 16 stunning colors and styles—with more on the way—ensuring there's something to suit every taste and design vision. Whether you're working on a small home renovation or a large-scale commercial project, our expansive 230,000-square-foot warehouse allows us to meet your needs with efficiency and ease.

We provide convenient pick-up and delivery services, including third-party transportation to any location across the U.S., making it simple to get the products you need, when you need them.

At 21st Century Cabinetry, we make it easy to bring your vision to life—beautifully and affordably.

CARB II Compliant

2020 TECHNOLOGIES

ProKitchen PROFESSIONAL KITCHEN DESIGN SOFTWARE

21st Century Cabinetry

540 Glen Ave, Moorestown NJ 08057

Tel:(856)988-1717/1188 Fax: (856)614-4168

Email:sales@21stcenturycd.com

www.21stcenturycd.com

Policy

PLACING & CONFIRMING ORDERS

Please either fax or email the list of cabinets that you need to us; you will receive an acknowledgement, latest, by the end of day. Please review and **sign** the acknowledgment sheet to confirm the order and then email or fax back to us to place the order. (Order won't be processed until the signed acknowledgement is received). Once the order is confirmed, you will receive an sale order from us with a ship date.

DELIVERY

21st Century Cabinetry deliver to jobsite and warehouse. We will either deliver with our company truck or use an outside carrier (such as Trucking Company and UPS). Delivery fee will be determined when we decide which method of shipping is the best for the order, and it will be added on the estimate sheet. All jobsite delivery is Curb Delivery only. We do not move cabinets into customer's homes.

PICK UP ORDERS

Dealers may pick up at our 21st Century Cabinetry warehouse location at 540 Glen Ave., Moorestown, NJ 08057. Please indicate on your order sheet if you intend to do so. Pick up time are Monday-Friday, 9:00am-3:00pm. We allow tail-gate pick-ups, as well as personal vehicles. We do make every effort to accommodate walk-in or same day pick up requests, however 21st Century Cabinetry reserves the right to refuse to provide any orders that are not confirmed at least 1-2 business days prior to pick up.

TRANSPORTATION POLICY

The responsibility of 21st Century Cabinetry ceases upon delivery of product in good working order to transport companies and all product(s) are shipped at consignee's risk. Please inspect all product(s) at time of signing freight bill, and have transportation company note any damage incurred in transit. Price and specification are subject to change without notice.

LEAD TIME

Most assembled orders leave the warehouse within 2 weeks, RTA orders leave our warehouse in approximately 1-3 days. Lead time may vary for large orders or under special circumstances (such as national holidays, etc.).

MODIFICATIONS

Modifications are available for an additional fee, modification is subject to availability, may require more time, and is subject to cancellation at any time.

CLAIMS

When assembled cabinets are delivered or picked up, please inspect them then sign the packing slip, any incorrect or missing items will not be honored once the packing slip is signed for. If any item is missing or damaged please write on the packing slip and then contact us. For K/D cabinets you will have 7 days to open and inspect the items, if no claim was filed within 7 days, future claims will not be accepted. **Damaged items claims must be made prior to assembly and before installation. No damage claims will be processed after the installation.**

RETURNS

Cabinets can be returned for up to 3 weeks after delivery date. We can only accept RTA returns in new condition and original packaging. All returns are subject to inspection and a 25% restocking fee. Returns are accepted for credit only, and applicable credit will be applied to the dealer account. There are no returns for the following items and conditions: 1) No returns on any pieces of trim (this includes all types of moldings, toe kick, plywood panels, and etc.) 2) No returns on any modified cabinet (size customization, accessories addition, hinge swapping, and etc.) 3) No returns on display orders.

RETURNED CHECKS

21st Century Cabinetry will charge a $50 returned check fee for all returned checks. Any returned checks must be paid in full before additional shipments can be processed.

LIMITED WARRANTY

Warranty Coverage:

- Stained Cabinets: 5 years from the date of purchase.
- Painted Cabinets: 3 years from the date of purchase.

Eligibility:

- Valid for residential, domestic use only.
- Non-transferable; original purchaser must provide proof of purchase.

What Is Covered:

- Defects in materials or workmanship under normal use.

What Is Not Covered:

- Damage from misuse, mishandling, abuse, improper storage, or installation.
- Modifications, exposure to excessive moisture, extreme temperatures, accidents, or negligence.
- Normal wear and tear, including:
  - Wood expansion/contraction resulting in seam lines, minor joint separations, or hairline cracks (common in painted finishes).
  - Natural variations in wood color, grain, or aging due to sunlight, smoke, cleaning products, or other environmental factors.
- Natural wood characteristics: Part of the inherent beauty of wood is the natural variations that occur, being that it is an organic material. Grain, pinholes, and knots are all characteristics that tell the story of the tree that becomes your cabinetry. These features are intentional and should not be misinterpreted as defects.
- Woodworking joints: A dado joint is a woodworking joint that is not inherently defective, and a seam is not a defect, but rather a natural part of the joint's construction. Dado joints are known for their strength and are used in various applications. The visible seam where two pieces of wood join is a characteristic of the joint's construction, not a defect.
- Costs related to installation, removal, or transportation of defective products.

Product Updates & Replacements:

- 21st Century Cabinetry reserves the right to update designs, materials, and specifications without prior notice.
- Warranty replacements are subject to product availability at the time of claim. Discontinued items will be replaced with the closest available equivalent; exact matches are not guaranteed.

Filing a Claim:

- All claims must be submitted prior to cabinet installation or assembly. Claims submitted after installation will be denied.
- Claims must be initiated through the original dealer or distributor—not directly with 21st Century Cabinetry.
- Submit a written claim, including proof of purchase, to:

  21st Century Cabinetry

  540 Glen Ave, Moorestown, NJ 08057
- Do not return defective items unless instructed. Photographic evidence may be required.

Warranty Limitations:

- This warranty is the sole and exclusive remedy offered by 21st Century Cabinetry and replaces all other warranties, whether express or implied, including warranties of merchantability or fitness for a particular purpose.

	21ST Century Cabinetry 540 Glen Ave, Moorestown NJ 08057 Ph: 856-988-1717 Fax:856-614-4168 Email: sales@21stcenturycd.com	Purchase Order Form

Your Company Name: **Your Name:**

Company Address:

Phone # **Fax #** **Email:**

Delivery Address:

Today's Date: **Preferred Delivery/Pick up Date:**

Pick Up ☐ **Deliver to Warehouse** ☐ **Delivery to Jobsite** ☐ **Arrange Own Shipping** ☐

Cabinet Style:

SE ☐ DS ☐ PE ☐ BA ☐ AN ☐ SA ☐

CT ☐ SG ☐ AL ☐ GL ☐ WW ☐ WO ☐

GR ☐ KS ☐ NV ☐ WH ☐ VA ☐

K/D ☐ Assembled ☐ PO#

Cabinet Style	Quantity	Item Code	Modification Note

Cabinet Style	Quantity	Item Code	Modification Note

21ST CENTURY CABINETRY
Warehouse address: 540 Glen Ave, Moorestown NJ 08057
Phone: 856-988-1717 856-988-1188
Fax: 856-614-4168
E-mail: sales@21stcenturycd.com

Return/Replacement Form

Your company name: **Your Name:**

Company Address:

Phone Number: **Fax Number:** **E-mail:**

Ship to Address:

Today's Date:

Original Est# or **Original Invoice #**

Your P.O # **Picture provided: Yes** ☐ **NO** ☐ **(All replacement request requires a picture)**

Cabinet Style	Quantity	Item Code/Part	Reason for return/replacement

Avalon



- Solid Wood Door ,Frame and MDF Center Panel, Plywood Side
- Soft close Drawer and Doors
- 3/4”shelves
- 6-way adjustable hinges
- Natural Finish Inside

Wild wood



- Solid Wood Door ,Frame Plywood side
- Soft Close Drawer and Doors
- 3/4”shelves
- 6-way adjustable hinges
- Natural Finish Inside

Aspen



- Solid Wood Door ,Frame and MDF Center Panel
- Soft Close Drawer and Doors
- 3/4”shelves
- 6-way adjustable hinges
- Natural Finish Inside

Sedona



- Solid Wood Door and Plywood side
- Soft Close Drawer and Doors
- 3/4”shelves
- 6-way adjustable hinges
- Finished Interior

Gray Stone



- Solid Wood Door ,Frame and MDF Center Panel, Plywood Side
- Soft close Drawer and Doors
- 3/4”shelves
- 6-way adjustable hinges
- Natural Finish Inside

Dove White Shaker

- Solid Wood Door ,Frame and MDF Center Panel
- Soft Close Drawer and Doors
- 3/4”shelves
- 6-way adjustable hinges
- Natural Finish Inside

Charlton



- Solid Wood Door and Plywood side
- Soft Close Drawer and Doors
- 3/4”shelves
- 6-way adjustable hinges
- Natural Finish Inside

Perla



- Solid Wood Door ,Frame and MDF Center Panel
- Soft Close Drawer and Doors
- 3/4”shelves
- 6-way adjustable hinges
- Natural Finish Inside

Glacier

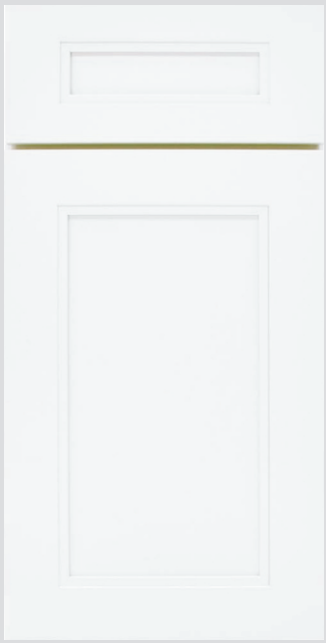

- Solid Wood Door ,Frame and MDF Center Panel
- Soft Close Drawer and Doors
- 3/4”shelves
- 6-way adjustable hinges
- Natural Finish Inside

Sterling



- Solid Wood Door ,Frame and MDF Center Panel
- Soft Close Drawer and Doors
- 3/4”shelves
- 6-way adjustable hinges
- Natural Finish Inside

kingston



- Solid Wood Door ,Frame and MDF Center Panel
- Soft Close Drawer and Doors
- 3/4”shelves
- 6-way adjustable hinges
- Natural Finish Inside

Nova



- Solid Wood Door ,Frame and MDF Center Panel
- Soft Close Drawer and Doors
- 3/4”shelves
- 6-way adjustable hinges
- Natural Finish Inside

White stone



- HDF Door, Soft Close Drawer and Doors with 7/8 Drawer Box Extension
- 3/4”shelves
- 6-way adjustable hinges
- Natural Finish Inside

Vista



- HDF Door, Soft Close Drawer and Doors with 7/8 Drawer Box Extension
- 3/4”shelves
- 6-way adjustable hinges
- Natural Finish Inside

Barley



- Solid Wood Door ,Frame and MDF Center Panel
- Soft Close Drawer and Doors
- 3/4”shelves
- 6-way adjustable hinges
- Natural Finish Inside

Willow



Sierra



Veneered Solid Wood Door, Frame and MDF Center Panel
Soft close Drawer and Doors
3/4”shelves
6-way adjustable hinges
Natural Finish Inside

№	Part Number and Name	Specification
1	Drawer Front	3/4" thick solid wood throughout for all stained cabinet. 3/4" thick solid wood for the frame and MDF Center Panel for All painted cabinet and Sierra.WH and VA are made of HDF
2	Door	3/4" thick solid wood throughout for all stained cabinet. 3/4" thick solid wood for the frame and MDF Center Panel for All painted cabinet and Sierra. WH and VA are made of HDF
3	Drawer Box	5/8" thick solid wood for drawer box side panel, 1/2" thick plywood for drawer box bottom panel. Dove Tail Joint
4	Shelf	3/4" thick Plywood shelf, finished all 4 edges.
5	Cabinet Side Panel	1/2" Plywood
6	Toe kick	1/2" thick Toe kick, 4 1/2" high, finished with matching color.
7	Cabinet Back panel	1/2" Plywood
8	Bracket	Metal Bracket
9	Drawer Glides	Metal Glides with Plastic Adjuster attached to back panel and underneath drawer box. Soft close and full extension for all lines except WH and VA which have soft close and 7/8 extension (Full extension upgrade is available upon request)
10	Cabinet Fame Frame	1 ½" wide Solid wood fame frame for all except Sierra which is Veneered Solid Wood
11	Cabinet Top Panel	1/2" thick plywood
12	Door Hinge	6-Way Adjustable hinge with built in Soft close.Concealed.
Interior: Sedona has finished interior with matching door color.All others have natural finish interior.		

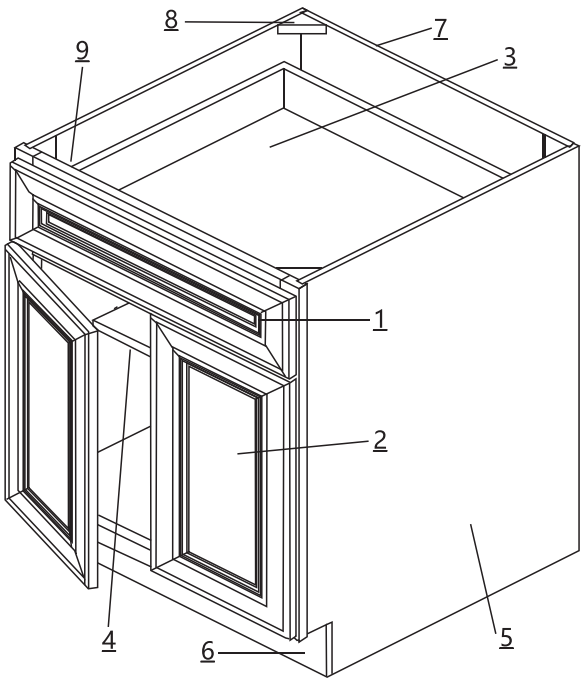

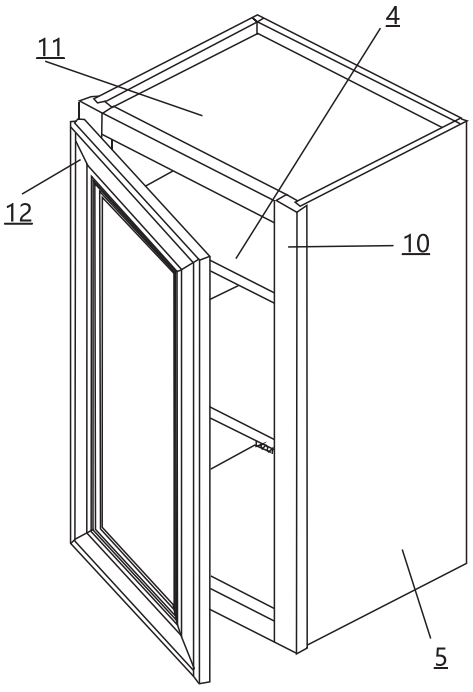

BASE CABINETS: 1 Door 1 Drawer

	Price A (SE/CT/WW)	Price B		Price C (AN/DS/SG/GL/GR/NV/KS/WO)	Price D (WH/VA)	Price E (SA)
		PE/BA	AL			
BFH09	N/A	N/A	$360	$360	N/A	$422
B09	$435	$422		$413	$330	$483
B12	$570	$553		$542	$434	$634
B15	$680	$660		$646	$517	$756
B18	$796	$772		$756	$605	$884
B21	$866	$840		$823	$658	$962

BASE CABINETS: 2 Door 1 Drawer

B24	$956	$927	$908	$726	$1062
B27	$1030	$1000	$979	$783	$1145
B30	$1211	$1174	$1150	$920	$1346

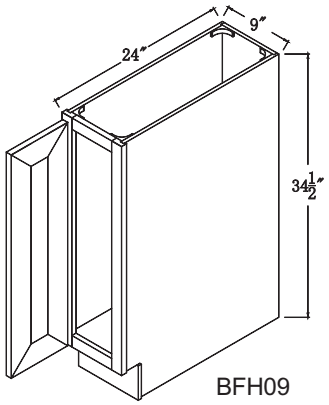

BFH09

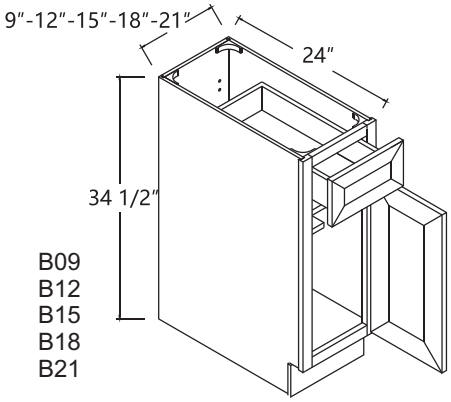

B09
B12
B15
B18
B21

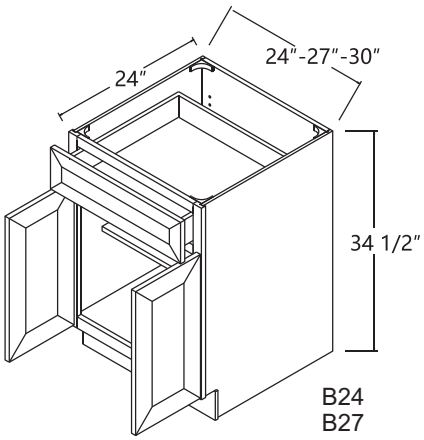

B24
B27
B30

BASE CABINETS: 2 Door 2 Drawer

B33	$1289	$1250	$1224	$979	$1432
B36	$1366	$1325	$1298	$1038	$1518

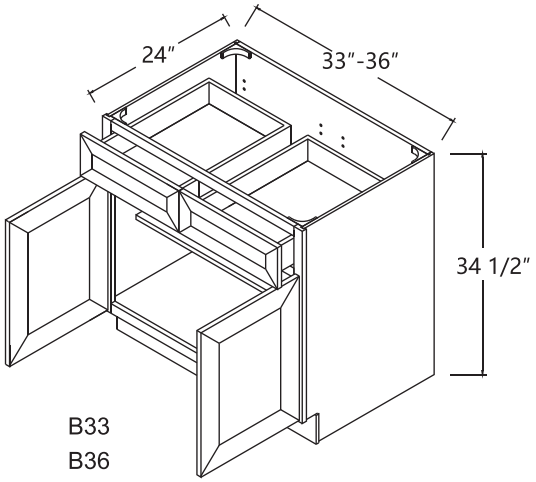

B33
B36

DRAWER BASE CABINET: 3 Drawers

	Price A（SE/CT/WW）	Price B（PE/AL/BA）	Price C (AN/DS/SG/GL/GR/NV/KS/WO)	Price D （WH/VA）	Price E （SA）
DB12-3	$923	$896	$877	$702	$1026
DB15-3	$1034	$1003	$982	$786	$1149
DB18-3	$1144	$1109	$1087	$869	$1271
DB21-3	$1264	$1226	$1201	$961	$1405
DB24-3	$1376	$1335	$1307	$1046	$1529
DB30-3	$1468	$1424	$1395	$1116	$1632
DB36-3	$1573	$1526	$1495	$1196	$1749

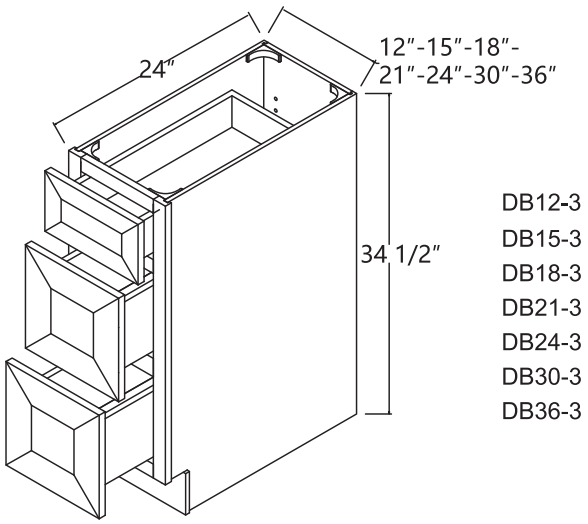

DB12-3
DB15-3
DB18-3
DB21-3
DB24-3
DB30-3
DB36-3

POT DRAWER CABINET:2DRAWERS

	Price A（SE/CT/WW）	Price B		Price C(AN/DS/SG/GL/GR/NV/KS/WO)	Price D （WH/VA）	Price E （SA）
		PE	AL/BA			
PD18-2	N/A	N/A	$1080	$1080	N/A	$1264
PD30-2	N/A	N/A	$1370	$1370	N/A	$1603
PD36-2	N/A	N/A	$1470	$1470	N/A	$1720

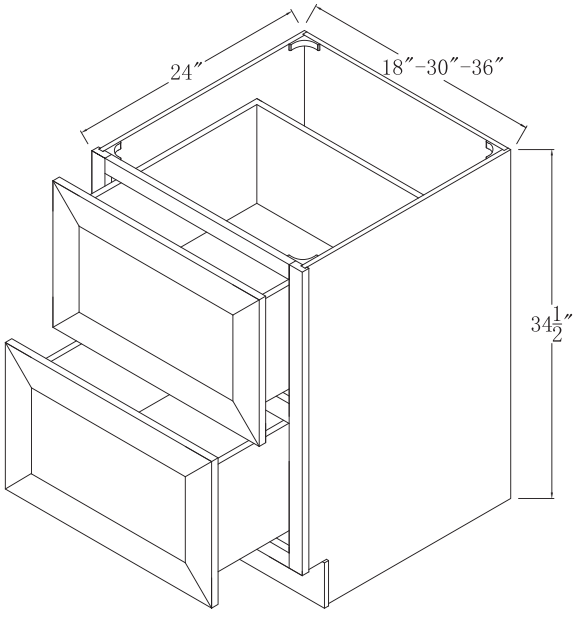

PD18-2
PD30-2
PD36-2

BLIND CORNER CABINET

	Price A (SE/CT/WW)	Price B (PE/AL/BA)	Price C (AN/DS/SG/GL/GR/NV/KS/WO)	Price D (WH/VA)	Price E (SA)
BBC39	$1036	$1005	$985	$788	$1152
BBC42	$1360	$1320	$1292	$1034	$1512

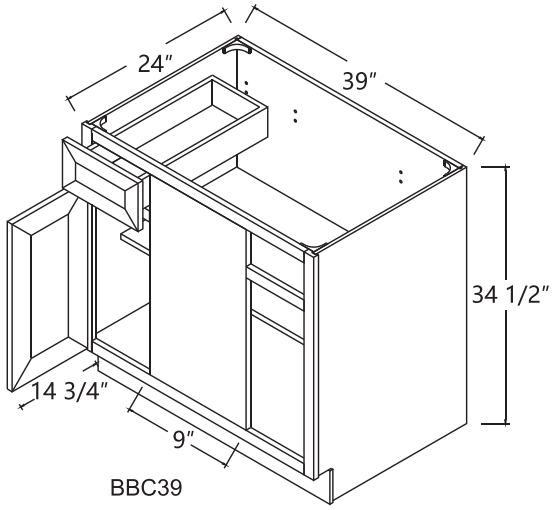

BBC39

Note: Please specify drawer on the Left Or Right
Note: Needs to be pulled out from wall Min 3", Max 9"

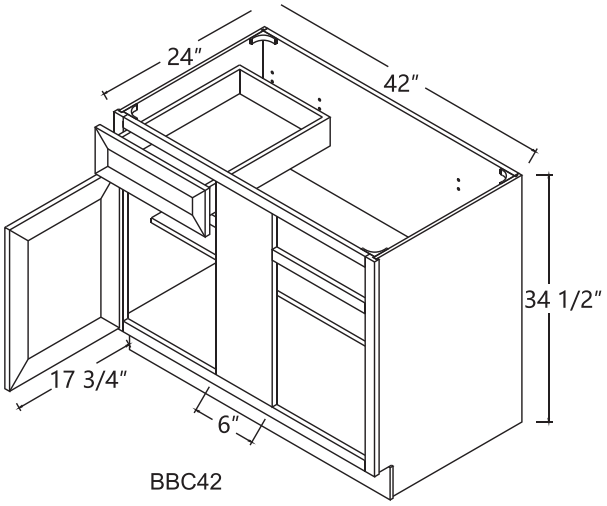

BBC42

Note: Please specify drawer on the Left Or Right
Note: Needs to be pulled out from wall Min 3", Max 6"

BASE END CABINET

BEC24	$1212	$1175	$1151	$921	$1347

BASE END SHELF

BES09	$696	$675	$661	$661	$773

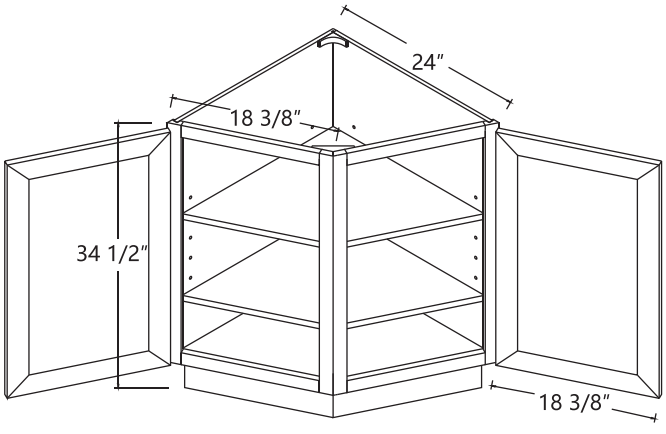

BEC24

Note: Please specify open to Left or Right

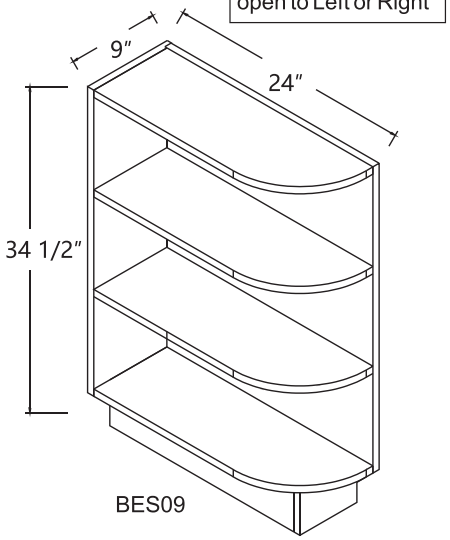

BES09

BASE MICROWAVE CABINET

	Price A（SE/CT/WW）	Price B		Price C（AN/DS/SG/GL/GR/NV/KS/WO）	Price D		Price E（SA）
		PE	AL/BA		WH	VA	
BMC24	N/A	N/A	$1104	$1030	$824	N/A	$1210
BMC30	$1160	$1144		$1070	$856		$1252

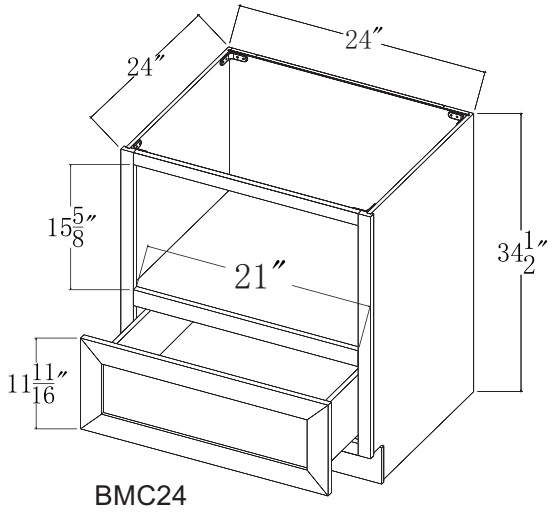

BMC24

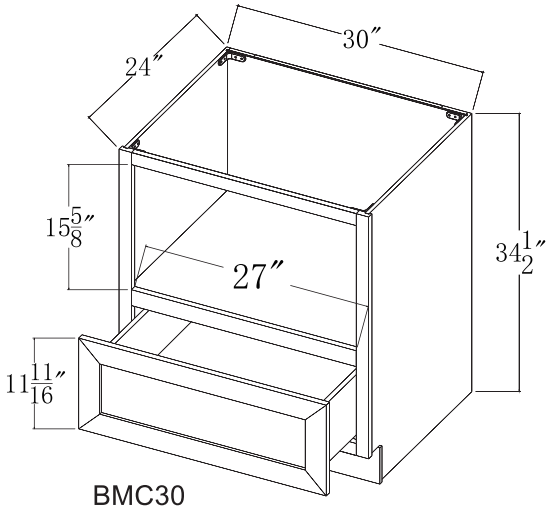

BMC30

BASE CORNER CABINET

	Price A（SE/CT/WW）	Price B（PE/AL/BA）	Price C（AN/DS/SG/GL/GR/NV/KS/WO）	Price D（WH/VA）	Price E（SA）
BLS33N	$1547	$1492	$1456	$1165	$1703
BLS36N	$1668	$1610	$1571	$1257	$1838

NOTE: This cabinet come with Shelf only, separ ate tray (BLS-Tray) can be purchased to be added to this cabinet

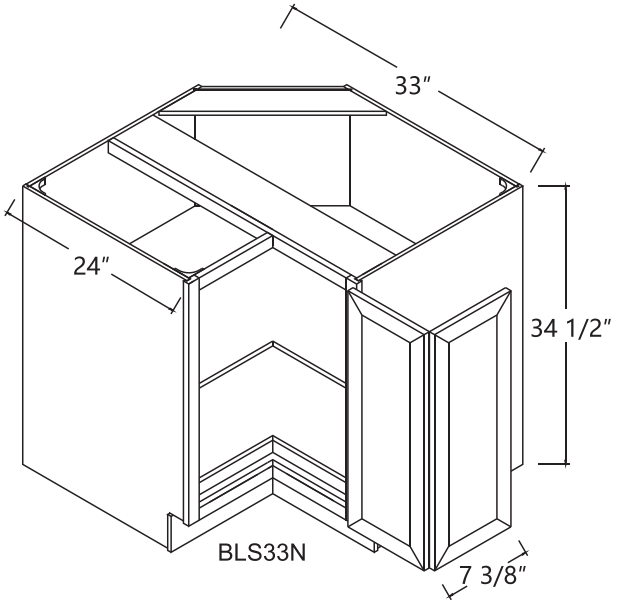

BLS33N

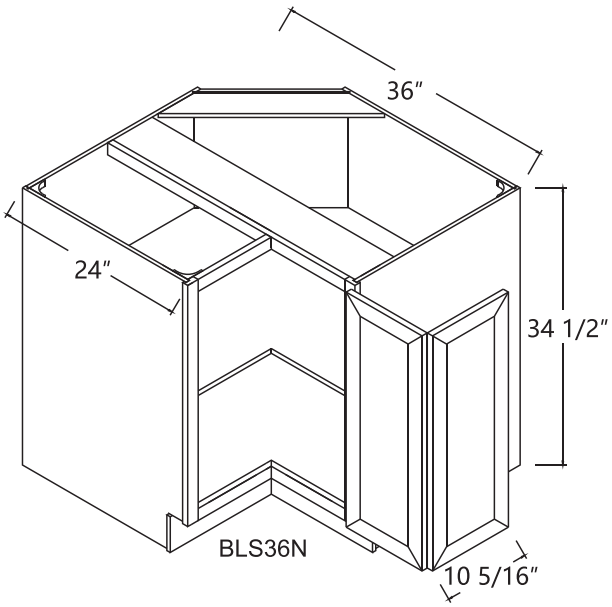

BLS36N

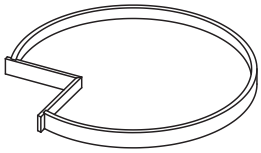
BLS-TRAY
（ Need to be purchased separately ）

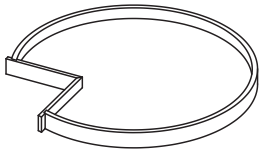
BLS-TRAY
（ Need to be purchased separately ）

SPICE RACK CABINET

	Price A (SE/CT/WW)	Price B (PE/AL/BA)	Price C (AN/DS/SG/GL/GR/NV/KS/WO)	Price D (WH/VA)	Price E (SA)
BSR06	$560	$544	$532	$426	$623
BSR09	$587	$570	$558	$446	$653
BSR12	$660	$640	$600	$480	$702
UTC12	$440	$440	$440	$440	$440

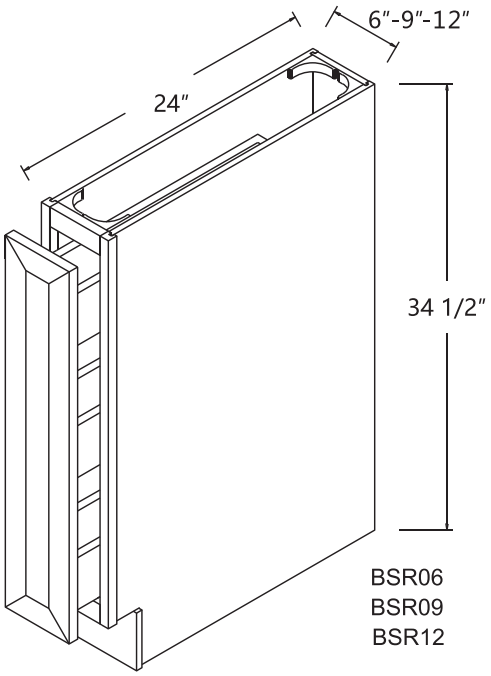

BSR06
BSR09
BSR12

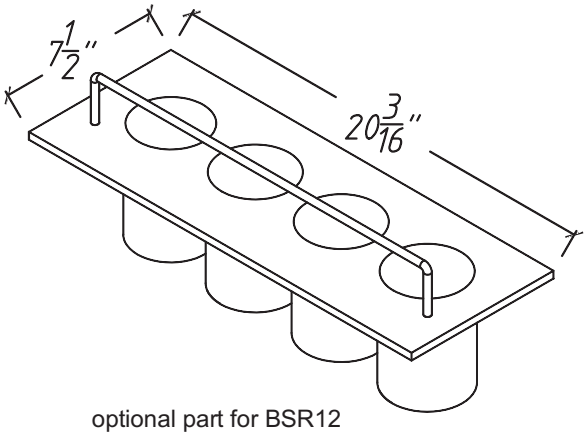

optional part for BSR12

CORNER SINK CABINET

CSB36	$1608	$1560	$1528	$1222	$1787

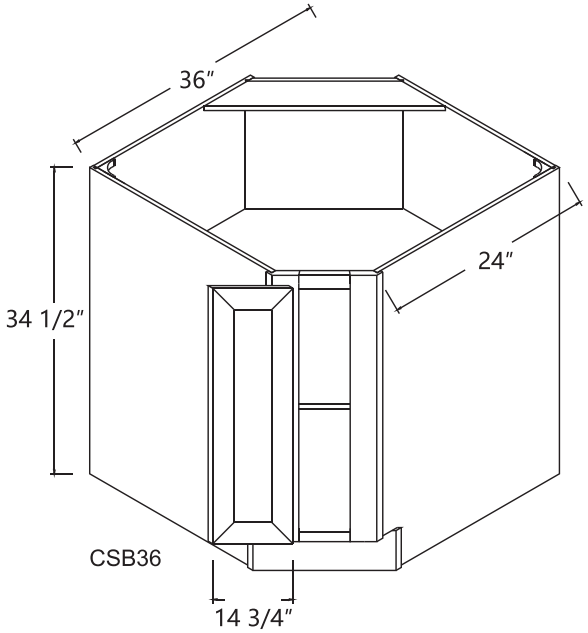

CSB36

Aspen- AN Sedona-SE Chariton-CT Glacier-GL Perla-PE Avalon-AL Dove White-DS Sterling-SG
Wild Wood-WW Gray Stone-GR NOVA-NV Kingston-KS White Stone-WH Vista-VA Barley-BA Sierra-SA

Base Angle Cabinet -12" Wide

	Price A (SECT/WW)	Price B (AL/BA)	Price C		Price D (WH/VA)	Price E (SA)
			ANDS/SG/GL/GR	NV/KS		
BEA12L	N/A	772	660	660	N/A	858
BEA12R	N/A	772	660	660	N/A	858

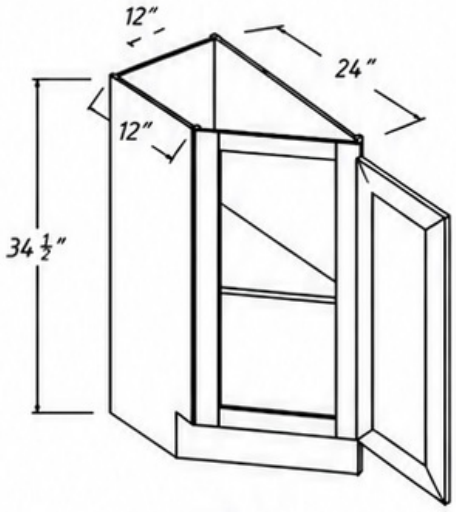

BEA12L

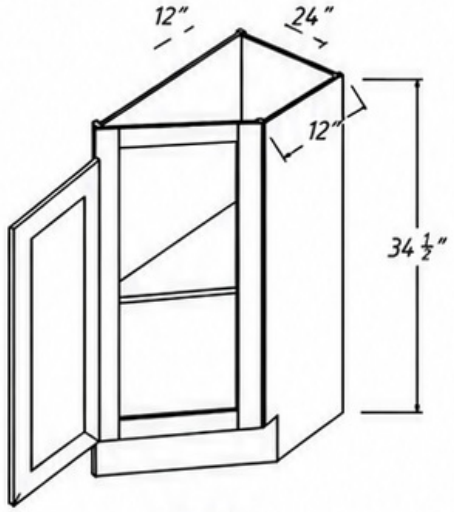

BEA12R

Standing Wall Cabinet -15" Deep

	Price A (SECT/WW)	Price B (AL/BA)	Price C		Price D (WH/VA)	Price E (SA)
			ANDS/SG/GL/GR	NV/KS		
STW1848	N/A	1349	1153	1153	N/A	1499
STW1854	N/A	1480	1265	1265	N/A	1644
STW1860	N/A	1628	1391	1391	N/A	1808

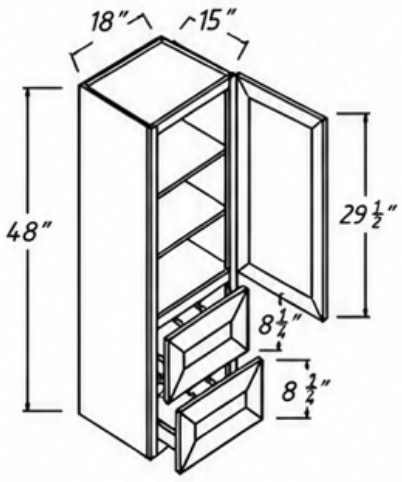

STW1848

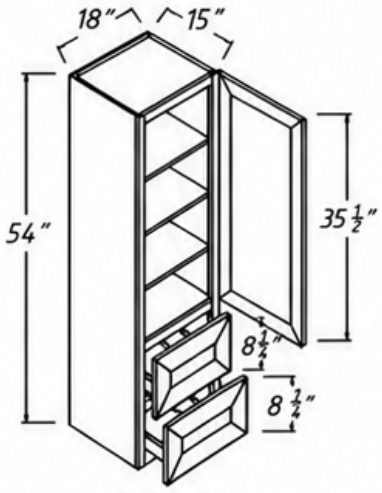

STW1854

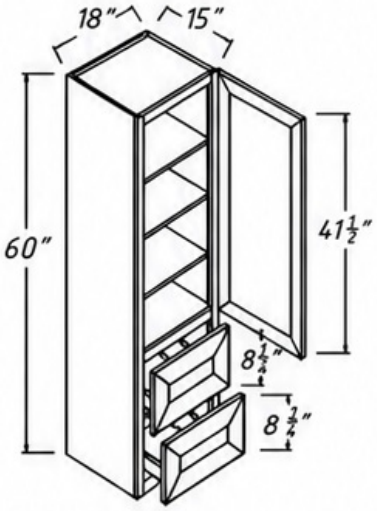

STW1860

Full Height Door Base Cabinet -12" Deep

	Price A (SE/CT/WW)	Price B (PE/AL/BA)	Price C		Price D (WH/VA)	Price E (SA)
			AN/DS/SG/GL/GR	NV/KS		
BFH12	N/A	N/A	N/A	$368	N/A	N/A
BFH15	N/A	N/A	N/A	$415	N/A	N/A

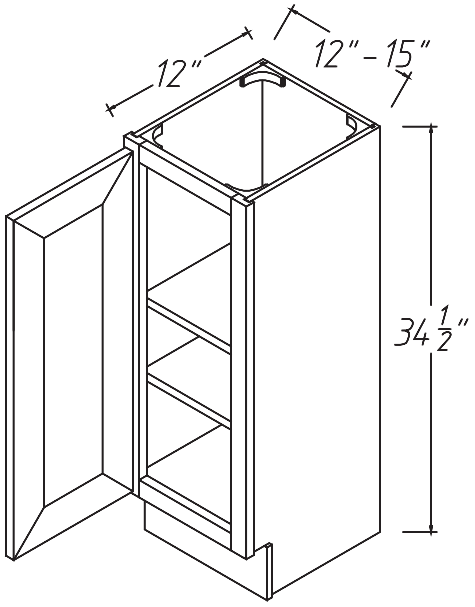

Full Height Door Base Cabinet -12" Deep

BFH24	N/A	N/A	N/A	$591	N/A	N/A
BFH30	N/A	N/A	N/A	$703	N/A	N/A

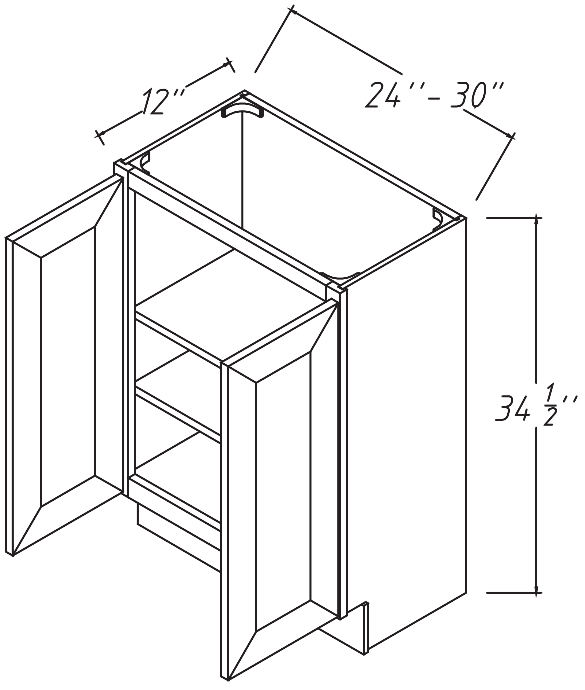

FARM SINK CABINET: 2 Doors

	Price A (SE/CT/WW)	Price B (PE/AL/BA)	Price C (AN/DS/SG/GL/GR/NV/KS/WO)	Price D (WH/VA)	Price E (SA)
FSB30	N/A	$1060	$1040	N/A	$1217
FSB36	$1188	$1120	$1100	$880	$1287

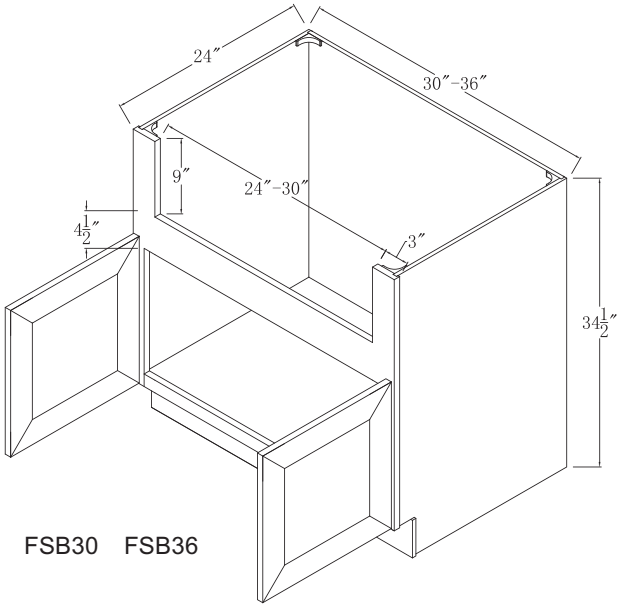

FSB30 FSB36

SINK BASE CABINET: 2 Door 1 Dummy Drawer

SB24	$676	$656	$642	$514	$751
SB27	$754	$732	$717	$573	$838
SB30	$844	$819	$802	$642	$938

SINK BASE CABINET: 2 Door 2 Dummy Drawer

SB33	$1001	$971	$951	$761	$1113
SB36	$1070	$1038	$1016	$813	$1189

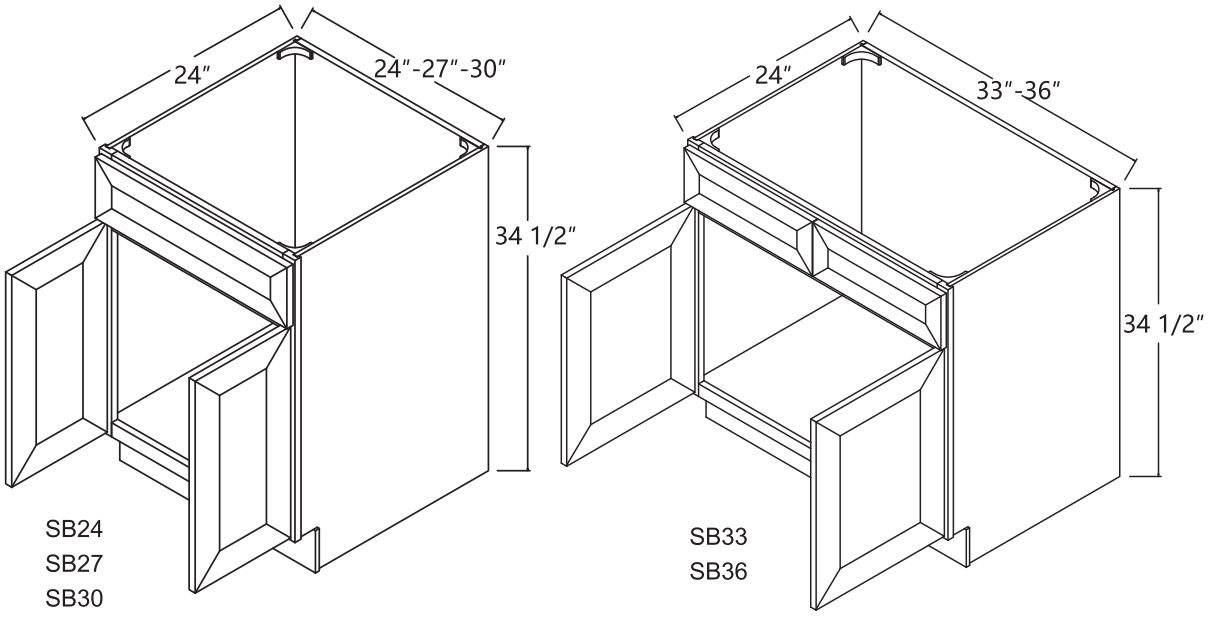

SB24
SB27
SB30

SB33
SB36

WALL CABINET: 1 Door

	Price A (SE/CT/WW)	Price B (PE/AL/BA)	Price C (AN/DS/SG/GL/GR/NV/KS/WO)	Price D (WH/VA)	Price E (SA)
W0930	$341	$331	$324	$259	$379
W1230	$396	$384	$376	$301	$440
W1530	$461	$447	$438	$350	$512
W1830	$530	$514	$503	$403	$589
W2130	$593	$575	$563	$451	$659
W0936	$391	$379	$371	$297	$434
W1236	$452	$438	$429	$343	$502
W1536	$523	$507	$497	$397	$581
W1836	$591	$574	$562	$450	$657
W2136	$661	$641	$628	$502	$735

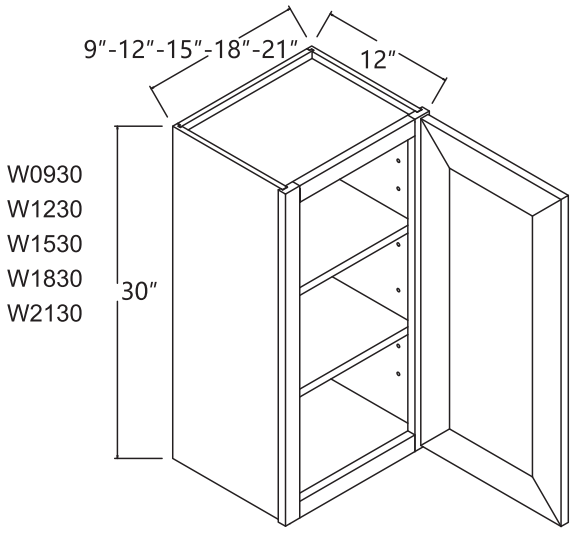

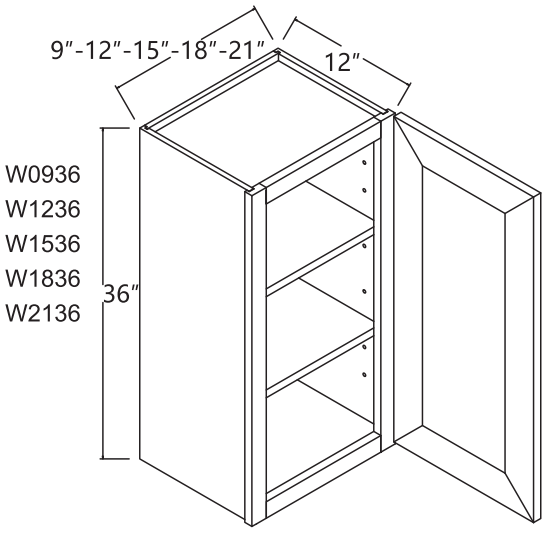

WALL CABINET: 1 Door

W0942	$441	$428	$419	$335	$490
W1242	$511	$496	$485	$388	$568
W1542	$584	$567	$555	$444	$649
W1842	$654	$634	$621	$497	$726
W2142	$729	$707	$692	$554	$810

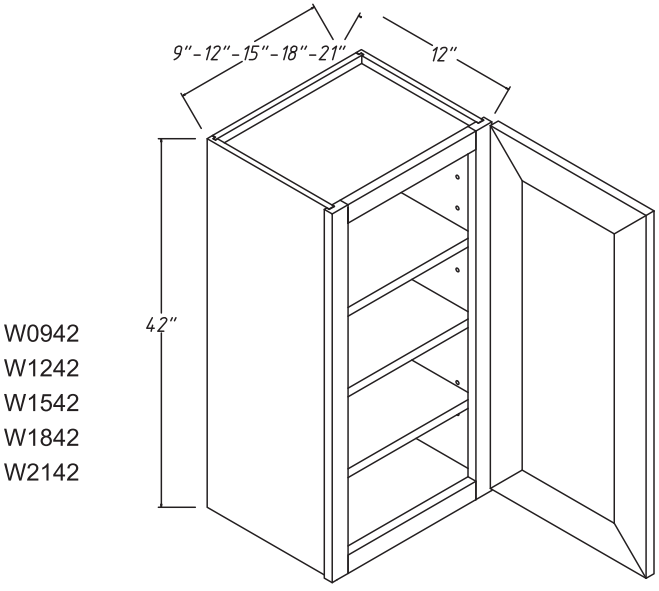

WALL CABINET: 2 Door

	Price A (SE/CT/WW)	Price B (PE/AL/BA)	Price C (AN/DS/SG/GL/GR/NV/KS/WO)	Price D (WH/VA)	Price E (SA)
W2430	$677	$657	$643	$515	$753
W2730	$740	$718	$703	$563	$823
W3030	$803	$779	$763	$610	$892
W3330	$848	$823	$806	$645	$943
W3630	$909	$882	$864	$691	$1010
W2436	$754	$731	$716	$573	$838
W2736	$778	$755	$739	$591	$865
W3036	$891	$864	$847	$677	$990
W3336	$960	$932	$912	$730	$1068
W3636	$1029	$998	$978	$782	$1144

W2430
W2730
W3030
W3330
W3630

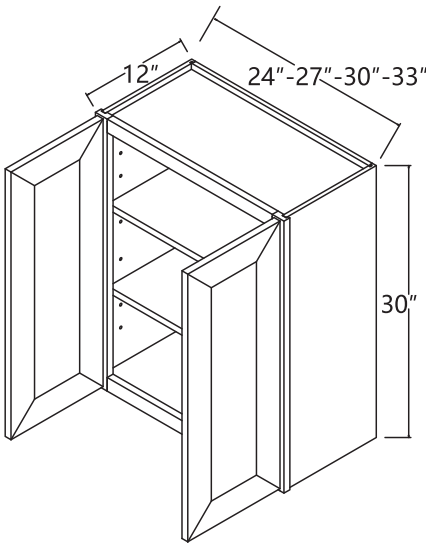

W2436
W2736
W3036
W3336
W3636

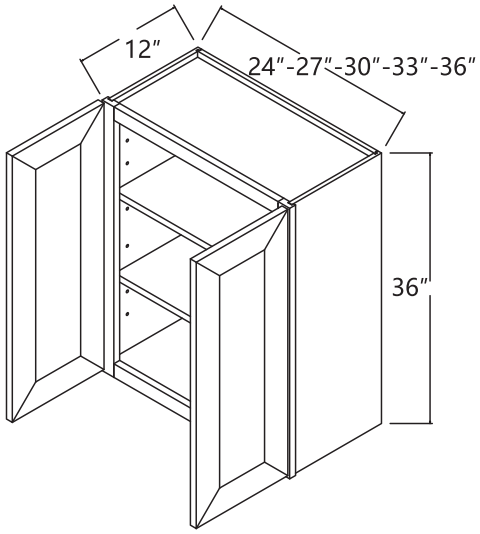

WALL CABINET: 2 Door

W2442	$814	$790	$773	$619	$905
W2742	$815	$791	$775	$620	$906
W3042	$979	$950	$930	$744	$1088
W3342	$1103	$1070	$1048	$838	$1226
W3642	$1178	$1143	$1119	$895	$1309

W2442
W2742
W3042
W3342
W3642

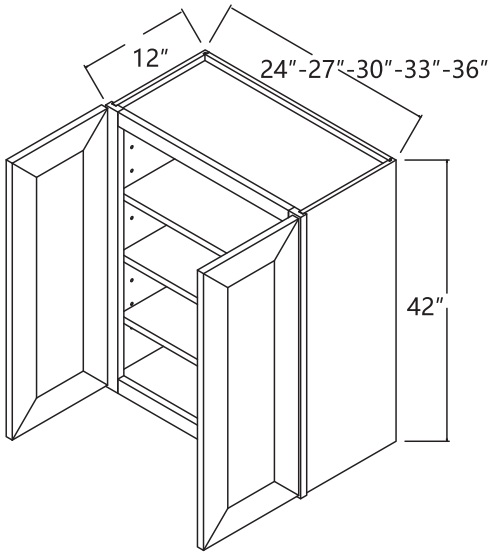

WALL CABINET: 2 Door

	Price A (SE/CT/WW)	Price B (PE/AL/BA)	Price C (AN/DS/SG/GL/GR/NV/KS/WO)	Price D (WH/VA)	Price E (SA)
W2412	$410	$402	$398	$319	$466
W3012	$405	$393	$385	$308	$450
W3312	$462	$448	$439	$351	$514
W3612	$442	$429	$420	$336	$491

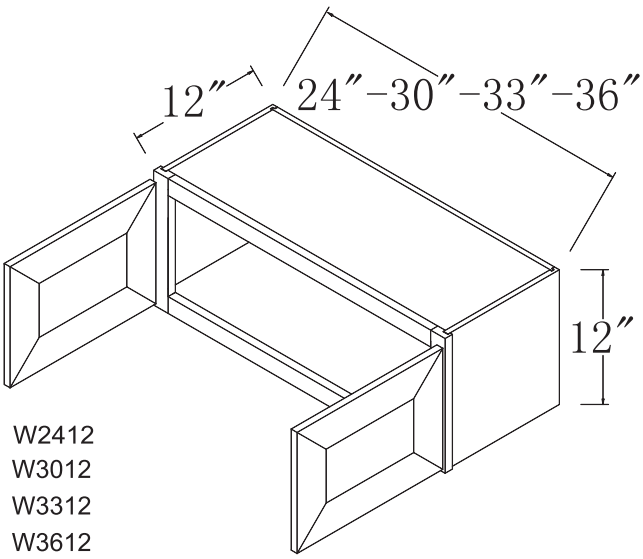

WALL CABINET: 2 Door

W2415	$448	$440	$436	$349	$511
W3015	$448	$435	$426	$341	$498
W3315	$486	$472	$462	$370	$541
W3615	$516	$500	$490	$392	$573

W2418	$486	$478	$472	$378	$553
W3018	$480	$466	$456	$365	$534
W3318	$513	$498	$487	$390	$570
W3618	$577	$559	$548	$438	$641

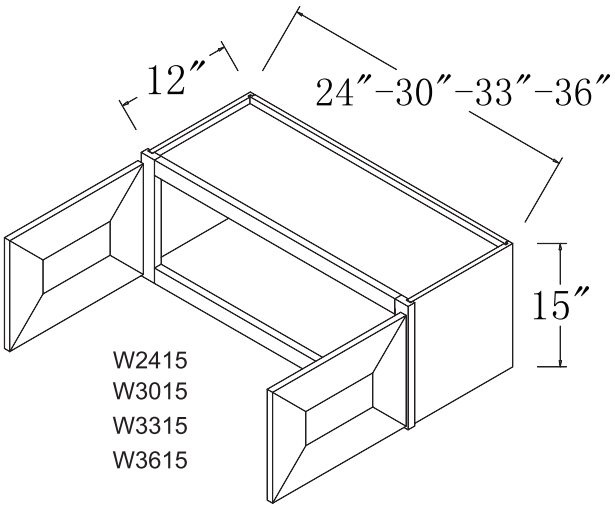

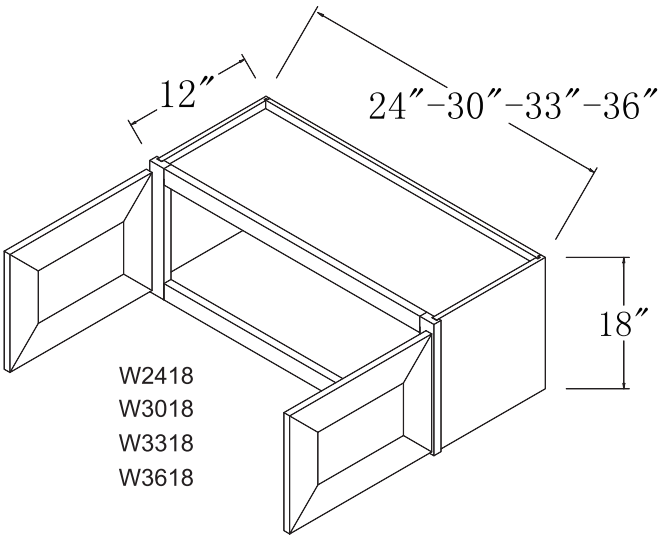

WALL CABINET: 2 Door

	Price A (SE/CT/WW)	Price B (PE/AL/BA)	Price C (AN/DS/SG/GL/GR/NV/KS/WO)	Price D (WH/VA)	Price E (SA)
W3021	$576	$564	$558	$447	$653
W3621	$656	$644	$638	$511	$747
W2424	$627	$615	$600	$480	$702
W3024	$676	$655	$642	$514	$751
W3324	$707	$686	$672	$538	$786
W3624	$743	$721	$706	$565	$826

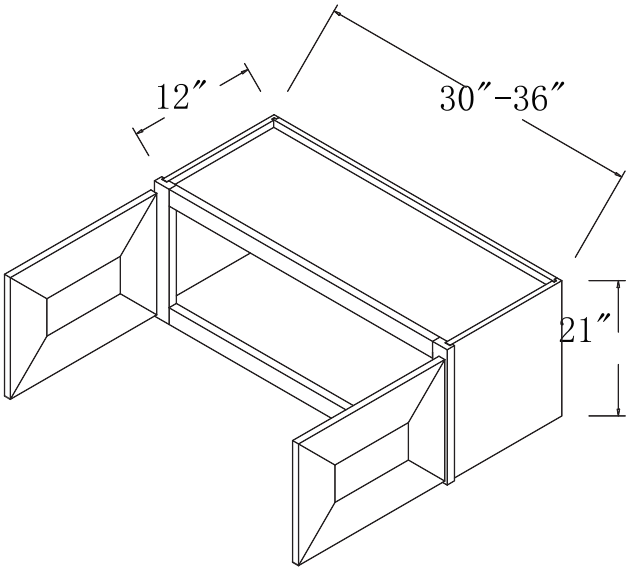

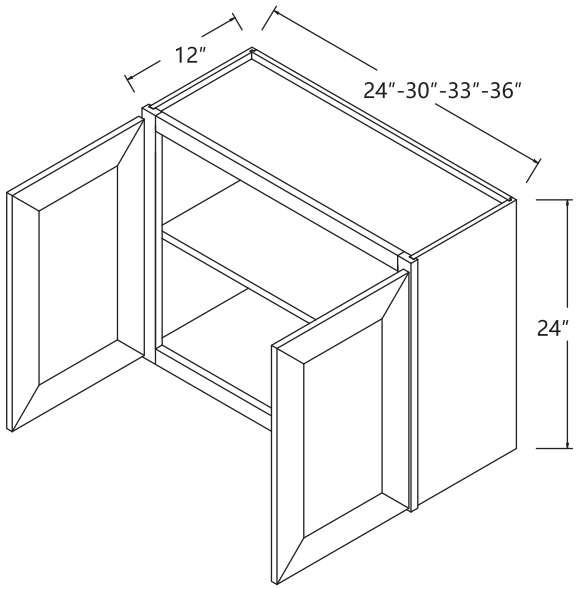

REFRIGERATOR CABINET

W301224	$562	$544	$532	$426	$622
W331224	$580	$562	$550	$440	$643
W361224	$598	$580	$568	$454	$664
W301524	$628	$609	$595	$476	$696
W331524	$646	$627	$613	$491	$717
W361524	$664	$645	$631	$505	$739

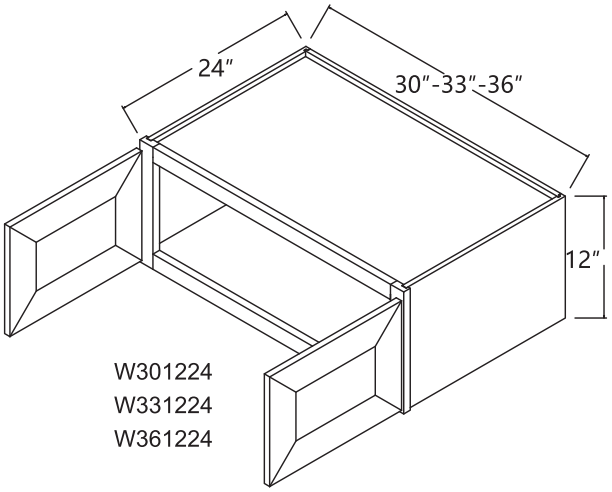

W301224
W331224
W361224

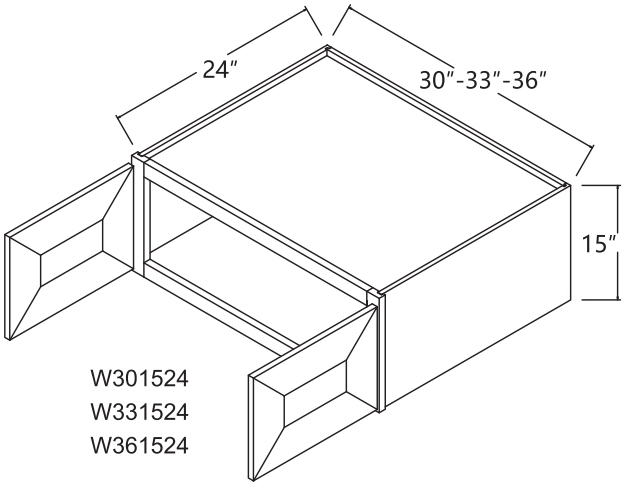

W301524
W331524
W361524

REFRIGERATOR CABINET

	Price A (SE/CT/WW)	Price B (PE/AL/BA)	Price C (AN/DS/SG/GL/GR/NV/KS/WO)	Price D (WH/VA)	Price E (SA)
W301824	$691	$669	$655	$524	$766
W331824	$709	$687	$673	$538	$787
W361824	$727	$705	$691	$553	$808
W302124	$850	$834	$826	$661	$967
W362124	$928	$910	$902	$722	$1056
W302424	$911	$882	$863	$691	$1010
W332424	$929	$900	$881	$705	$1031
W362424	$947	$918	$899	$720	$1052

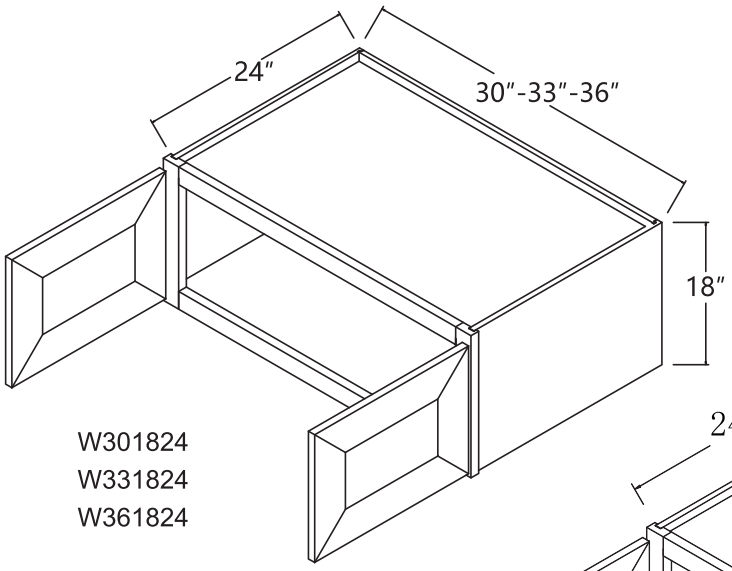

W301824
W331824
W361824

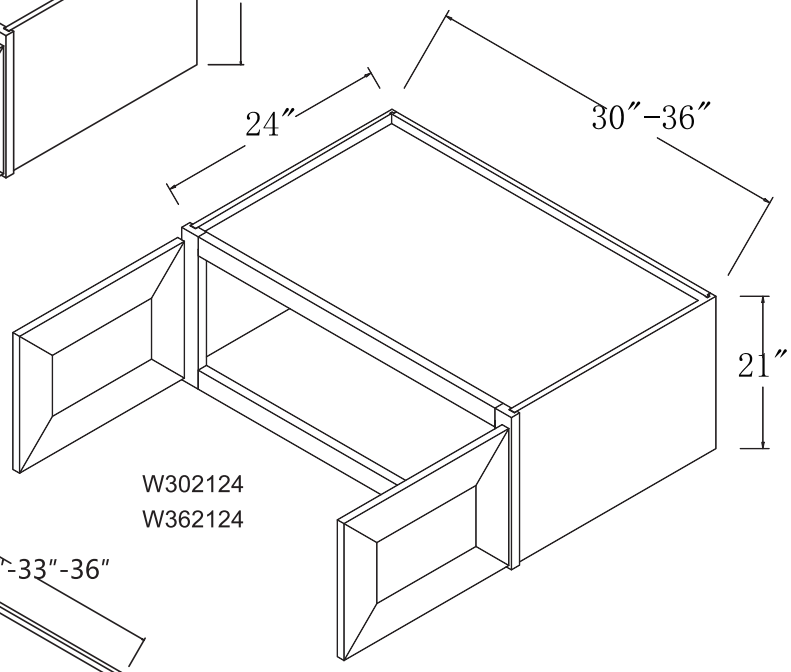

W302124
W362124

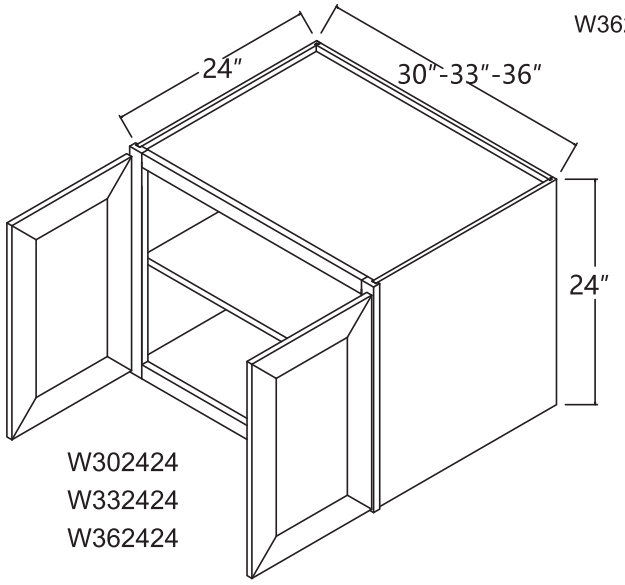

W302424
W332424
W362424

WALL DIAGONAL CABINET

	Price A (SE/CT/WW)	Price B (PE/AL/BA)	Price C (AN/DS/SG/GL/GR/NV/KS/WO)	Price D (WH/VA)	Price E (SA)
WDC2430	$835	$810	$793	$634	$928
WDC2436	$934	$906	$888	$710	$1038

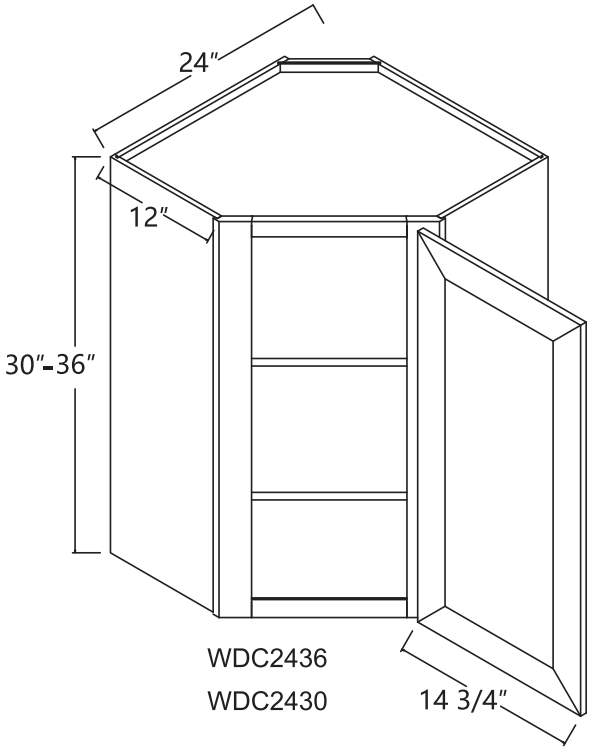

WALL DIAGONAL CABINET

WDC2442	$1026	$995	$975	$780	$1141

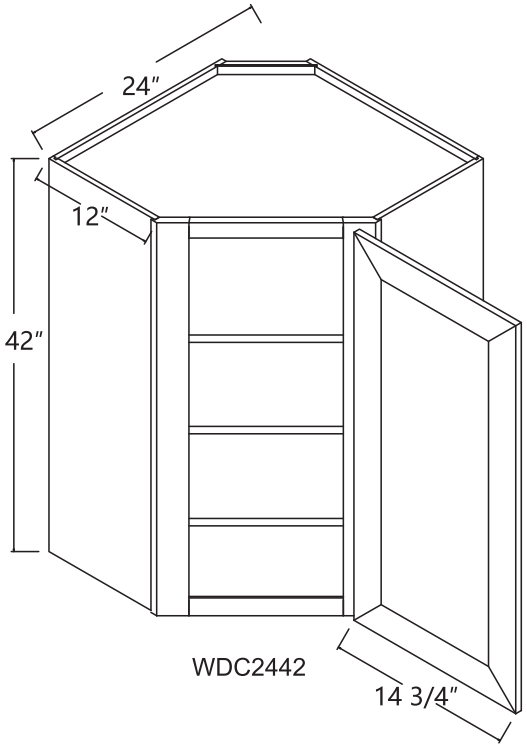

WALL DIAGONAL CABINET 15" DEEP

	Price A (SE/CT/WW)	Price B (PE/AL/BA)	Price C (AN/DS/SG/GL/GR/NV/KS/WO)	Price D (WH/VA)	Price E (SA)
WDC273615	$1100	$1067	$1045	$836	$1222
WDC274215	$1196	$1160	$1137	$909	$1330

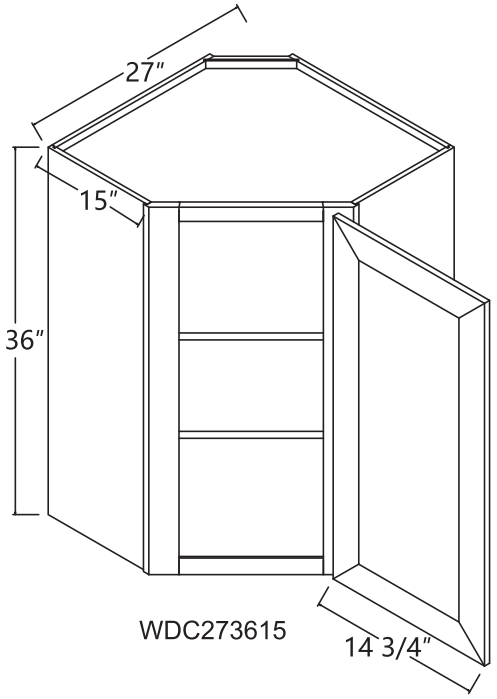

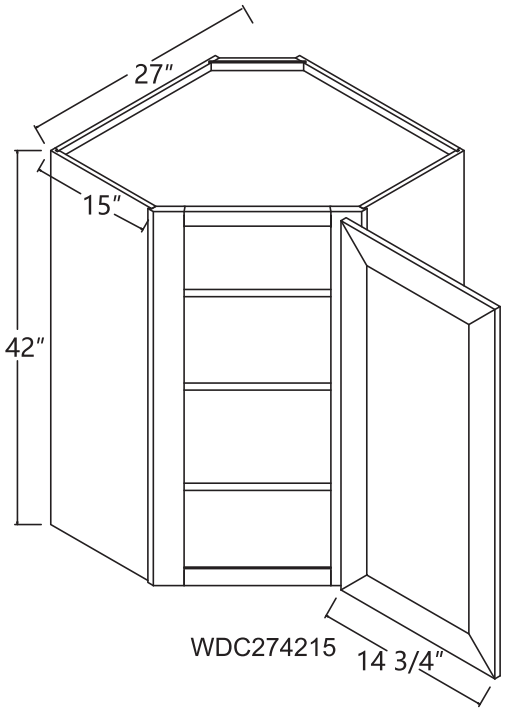

WALL LAZY SUSAN CABINET

WLS2430	$830	$814	$806	$645	$944
WLS2436	$930	$912	$902	$722	$1056
WLS2442	$1020	$1000	$992	$794	$1161

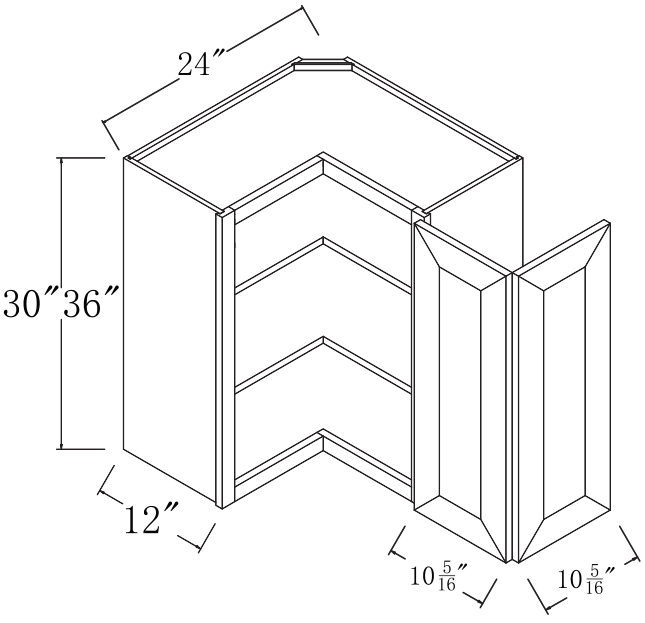

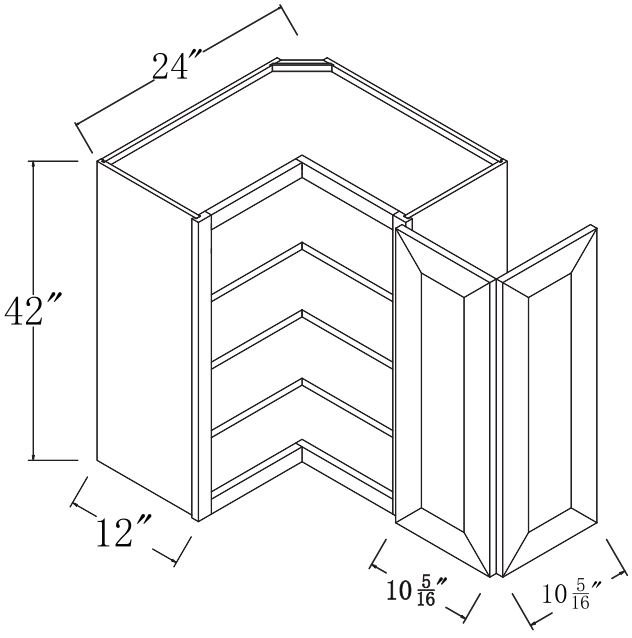

WALL END CABINET

	Price A (SE/CT/WW)	Price B (PE/AL/BA)	Price C (AN/DS/SG/GL/GR/NV/KS/WO)	Price D (WH/VA)	Price E (SA)
WEC1230	$468	$454	$445	$356	$520
WEC1236	$528	$513	$502	$402	$587

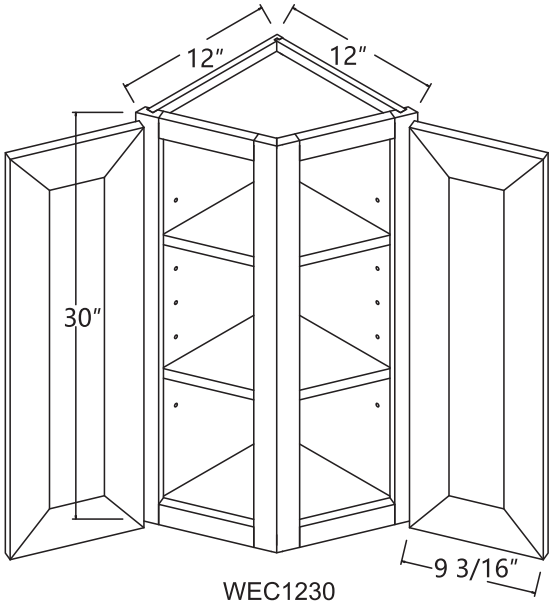

WEC1230

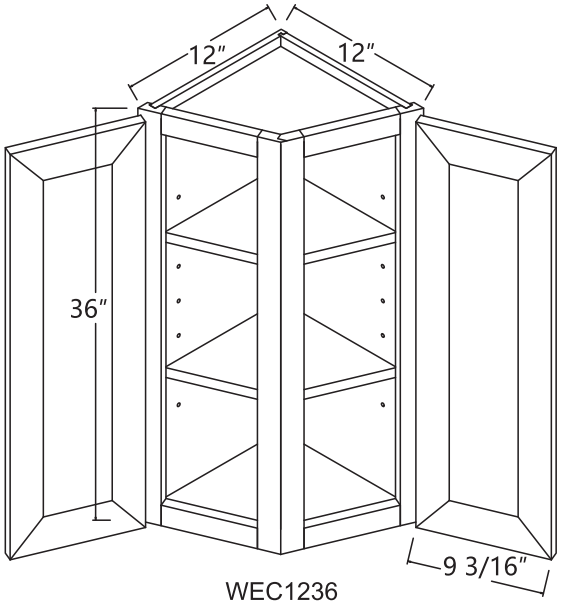

WEC1236

WALL END CABINET

WEC1242	$582	$565	$553	$442	$647

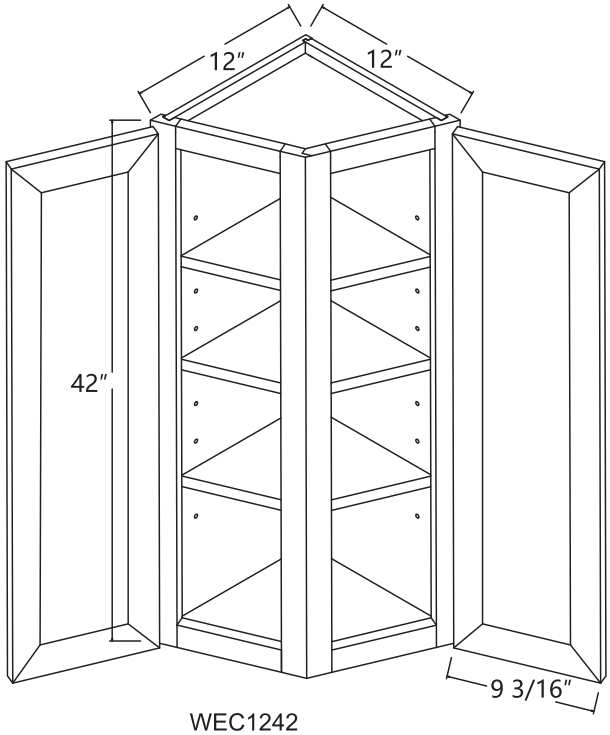

WEC1242

WALL MICROWAVE CABINET

	Price A (SE/CT/WW)	Price B (PE/AL/BA)	Price C (AN/DS/SG/GL/GR/NV/KS/WO)	Price D (WH/VA)	Price E (SA)
WMC3030	$928	$901	$882	$706	$1032

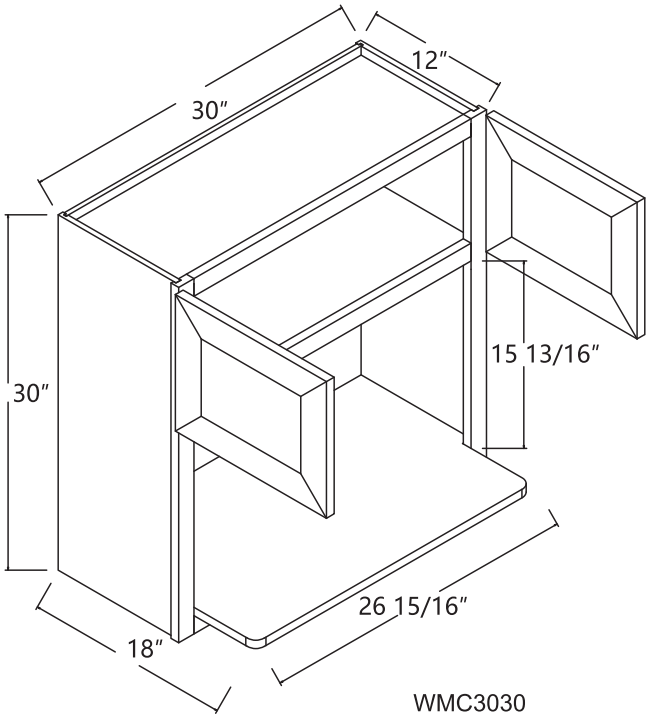

WMC3030

WALL MICROWAVE CABINET

WMC3036	$966	$937	$918	$735	$1074
WMC3042	$1020	$990	$969	$775	$1134

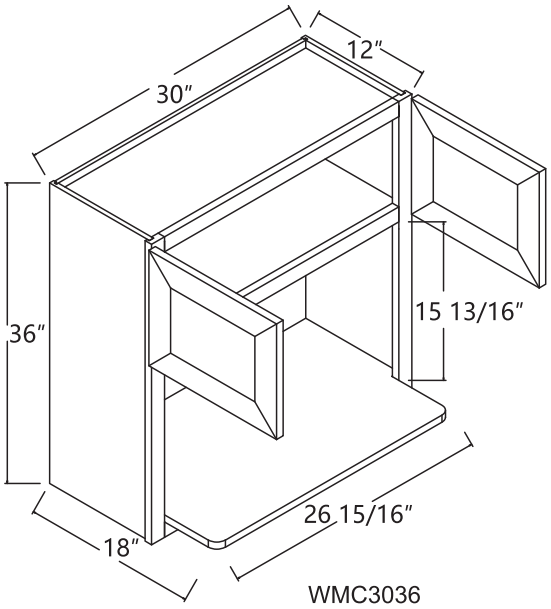

WMC3036

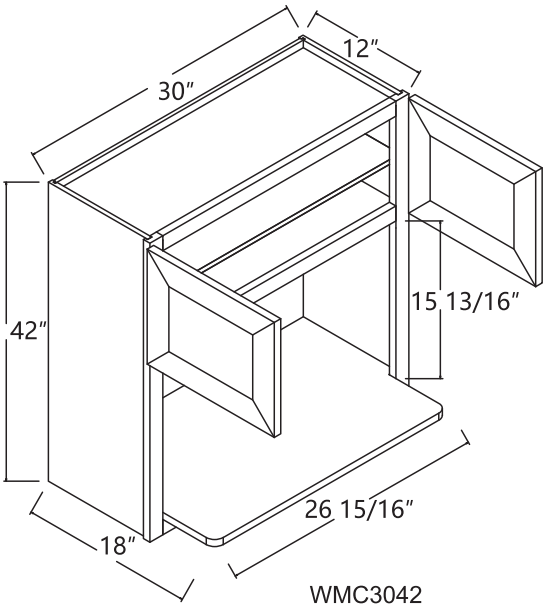

WMC3042

WALL END SHELF

	Price A (SE/CT/WW)	Price B (AN/PE/AL/BA)	Price C (DS/SG/GL/GR/NV/KS/WO)	Price D (WH/VA)	Price E (SA)
WES0930	$324	$314	$308	$308	$360
WES0936	$384	$372	$365	$365	$426
WES0942	$450	$437	$428	$428	$501

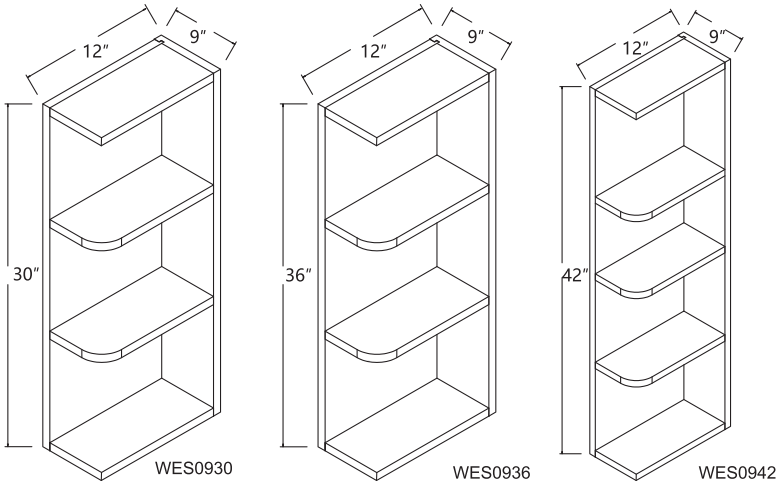

NOTE: Please specify Shelf open to Left or Right.

GLASS RACK

30GR	$116	$113	$111	$111	$129
36GR	$158	$153	$150	$150	$175

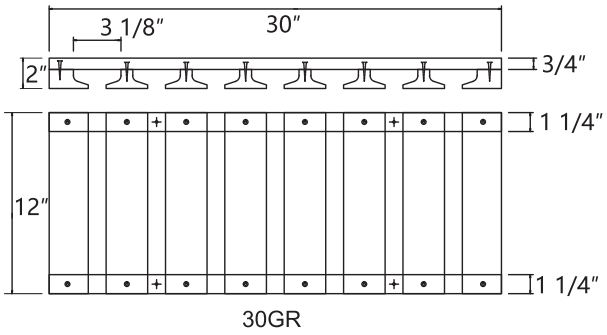

30GR

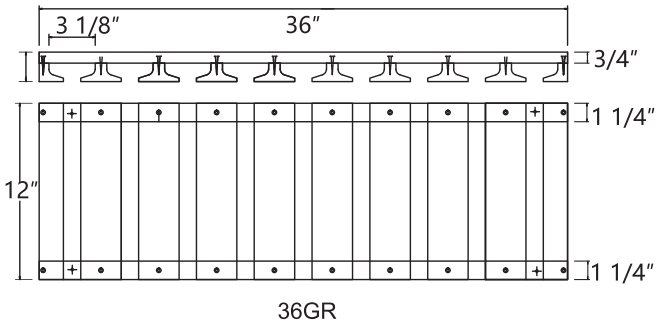

36GR

WINE RACK CABINET

WR30	$453	$440	$431	$431	$504
WR36	$550	$533	$522	$522	$611

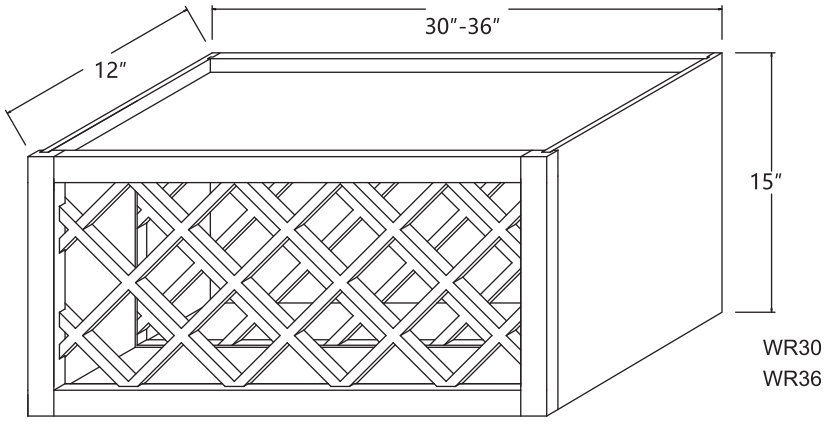

WR30
WR36

OVEN CABINET

	Price A (SE/CT/WW)	Price B (PE/AL/BA)	Price C (AN/DS/SG/GL/GR/NV/KS/WO)	Price D (WH/VA)	Price E (SA)
OC338424	$2256	$2188	$2143	$1715	$2508
OC339024	$2280	$2211	$2166	$1733	$2534
OC339624	$2566	$2489	$2437	$1950	$2852

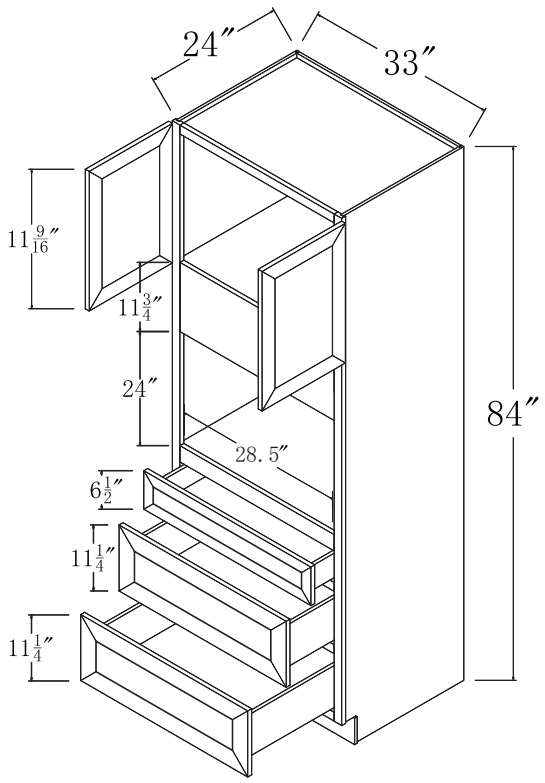

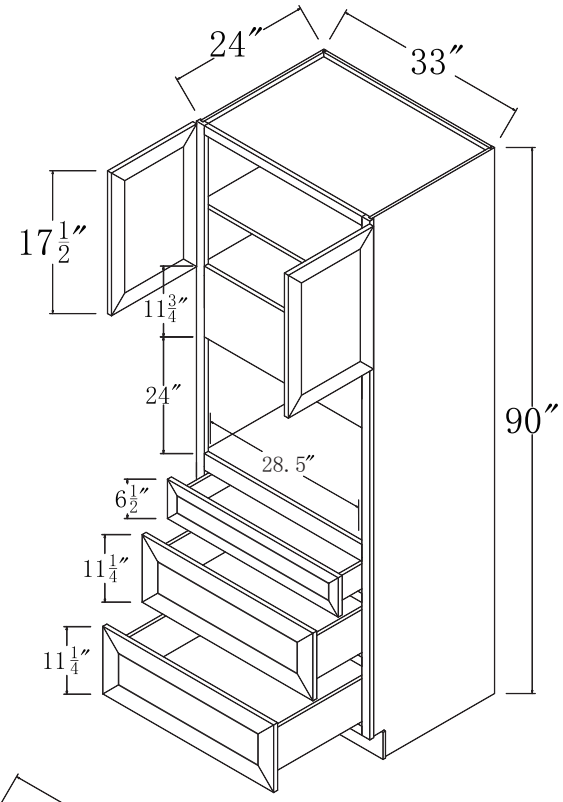

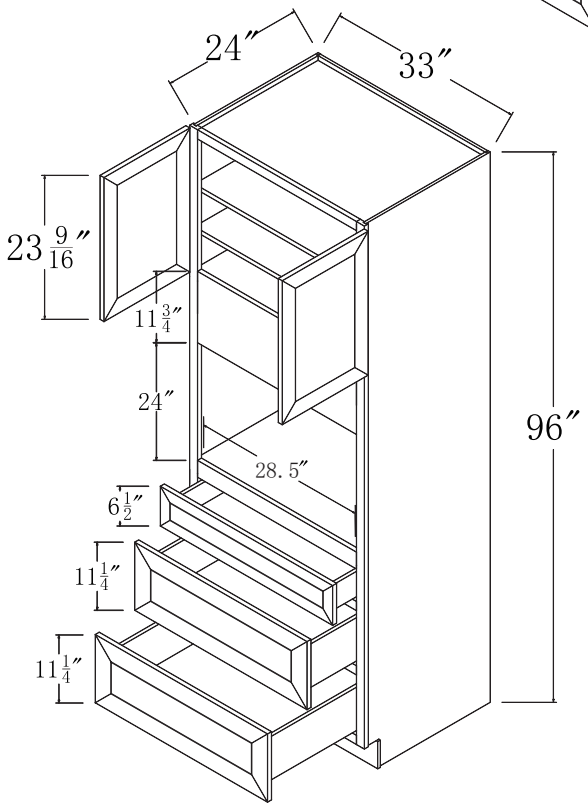

PANTRY

	Price A（SE/CT/WW）	Price B（PE/AL/BA）	Price C（AN/DS/SG/GL/GR/NV/KS/WO）	Price D（WH/VA）	Price E（SA）
WP188424	$1629	$1580	$1548	$1238	$1811
WP189024	$1735	$1683	$1648	$1319	$1928
WP189624	$1841	$1786	$1749	$1399	$2046

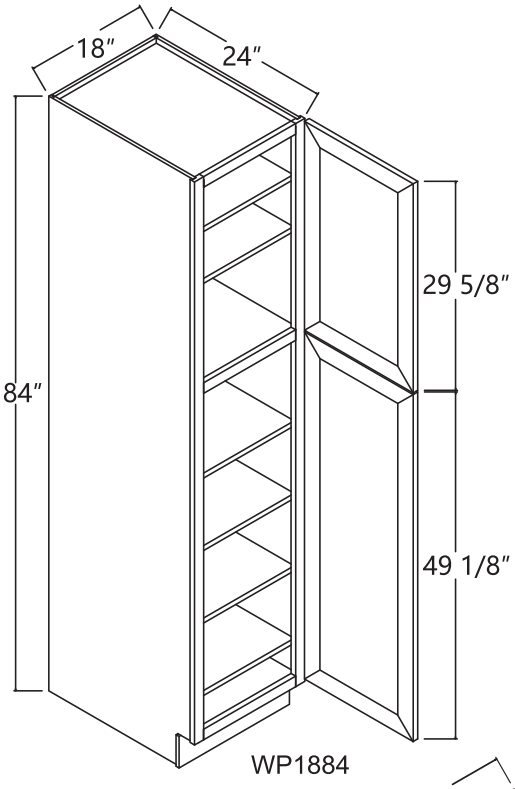

WP1884

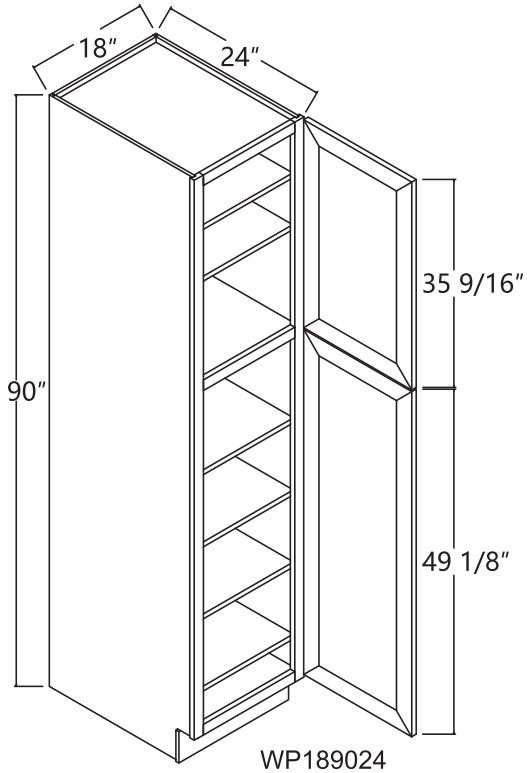

WP189024

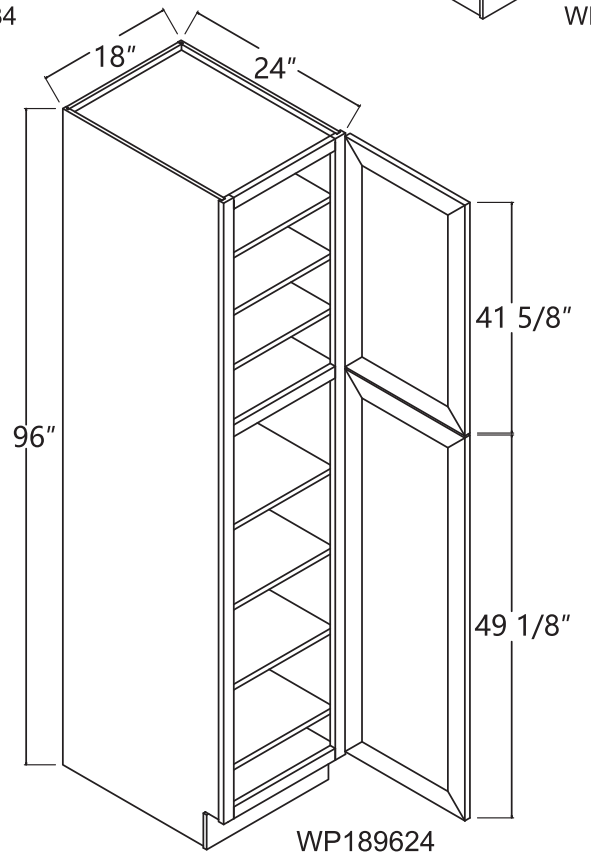

WP189624

PANTRY

	Price A (SE/CT/WW)	Price B (PE/AL/BA)	Price C (AN/DS/SG/GL/GR/NV/KS/WO)	Price D (WH/VA)	Price E (SA)
WP248424	$1770	$1717	$1681	$1345	$1967
WP249024	$1847	$1792	$1755	$1404	$2053
WP249624	$1978	$1919	$1879	$1504	$2199
WP308424	$1816	$1780	$1764	$1412	$2064
WP309024	$1922	$1886	$1866	$1493	$2184
WP309624	$2024	$1984	$1966	$1573	$2301

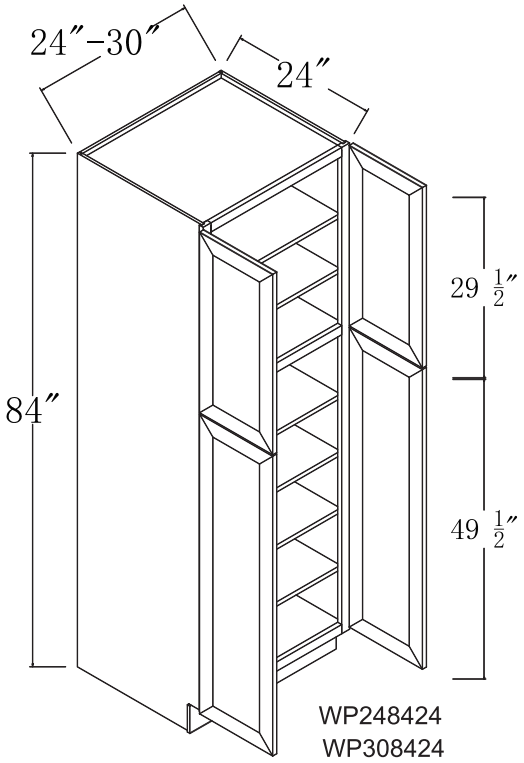

WP248424
WP308424

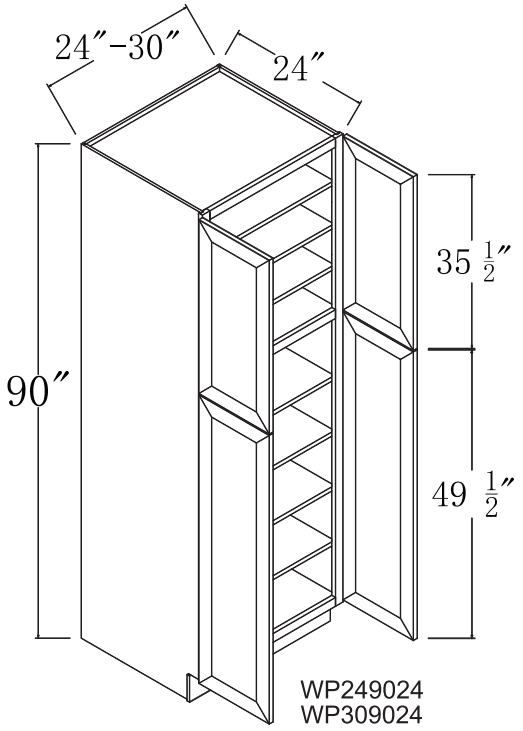

WP249024
WP309024

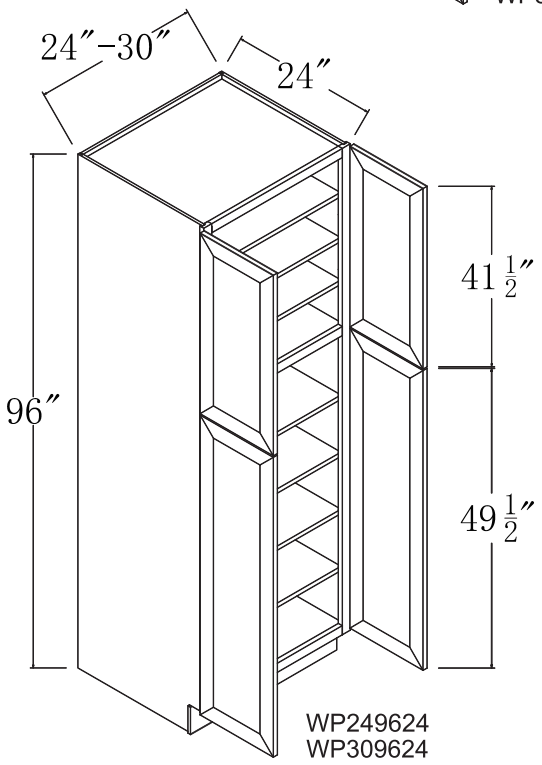

WP249624
WP309624

GLASS DOOR CABINET

	Price A		Price B		Price C		Price D (WH/VA)	Price E (SA)
	SE/CT	WW	PE/AL	BA	AN/DS/SG/GL/GR	NV/KS/WO		
GW1212	N/A	$292	$292	N/A	$292	N/A	N/A	N/A
GD1212	N/A	$166	$166	N/A	$166	N/A	N/A	N/A
GW1512	N/A	$322	$322	N/A	$322	N/A	N/A	N/A
GD1512	N/A	$193	$193	N/A	$193	N/A	N/A	N/A
GW1812	N/A	$346	$346	N/A	$346	N/A	N/A	N/A
GD1812	N/A	$220	$220	N/A	$220	N/A	N/A	N/A
GW2112	N/A	$373	$373	N/A	$373	N/A	N/A	N/A
GD2112	N/A	$247	$247	N/A	$247	N/A	N/A	N/A
GW1215	N/A	$322	$322	N/A	$322	N/A	N/A	N/A
GD1215	N/A	$171	$171	N/A	$171	N/A	N/A	N/A
GW1515	N/A	$350	$350	N/A	$350	N/A	N/A	N/A
GD1515	N/A	$198	$198	N/A	$198	N/A	N/A	N/A
GW1815	N/A	$379	$379	N/A	$379	N/A	N/A	N/A
GD1815	N/A	$225	$225	N/A	$225	N/A	N/A	N/A
GW2115	N/A	$407	$407	N/A	$407	N/A	N/A	N/A
GD2115	N/A	$263	$263	N/A	$263	N/A	N/A	N/A

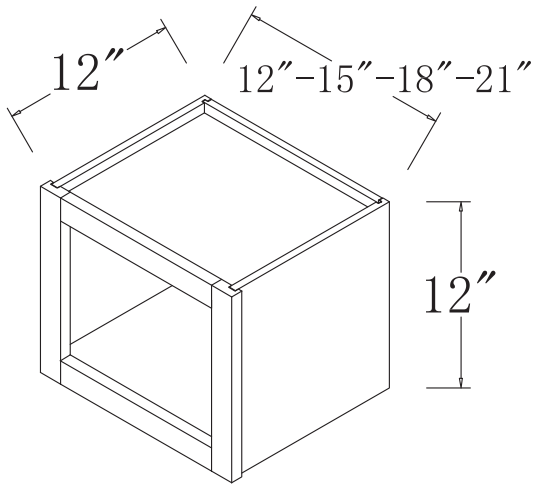

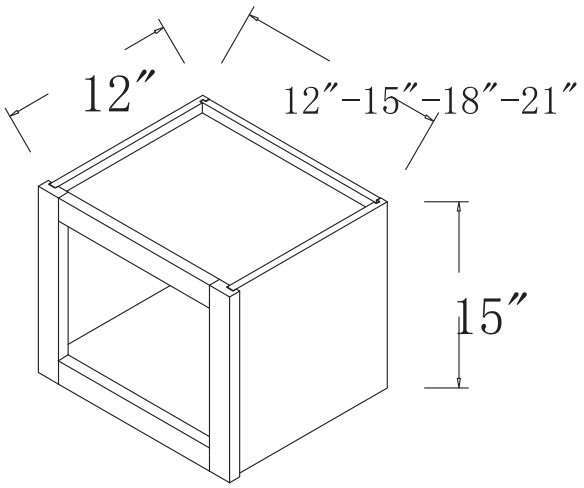

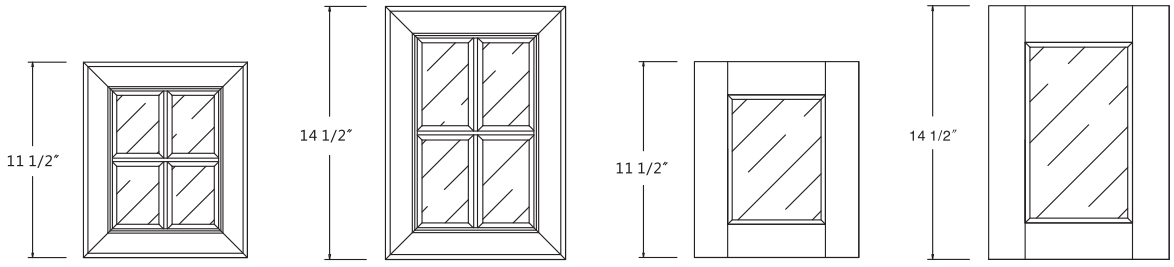

GLASS DOOR CABINET

	Price A		Price B		Price C		Price D (WH/VA)	Price E (SA)
	SE/CT	WW	PE/AL	BA	AN/DS/SG/GL/GR	NV/KS/WO		
GW2412	N/A	$398	$398	N/A	$398	N/A	N/A	N/A
GD2412	N/A	$273	$273	N/A	$273	N/A	N/A	N/A
GW2712	N/A	$427	$427	N/A	$427	N/A	N/A	N/A
GD2712	N/A	$300	$300	N/A	$300	N/A	N/A	N/A
GW3012	N/A	$458	$458	N/A	$458	N/A	N/A	N/A
GD3012	N/A	$327	$327	N/A	$327	N/A	N/A	N/A
GW3312	N/A	$487	$487	N/A	$487	N/A	N/A	N/A
GD3312	N/A	$354	$354	N/A	$354	N/A	N/A	N/A
GW3612	N/A	$516	$516	N/A	$516	N/A	N/A	N/A
GD3612	N/A	$381	$381	N/A	$381	N/A	N/A	N/A
GW2415	N/A	$436	$436	N/A	$436	N/A	N/A	N/A
GD2415	N/A	$301	$301	N/A	$301	N/A	N/A	N/A
GW2715	N/A	$464	$464	N/A	$464	N/A	N/A	N/A
GD2715	N/A	$321	$321	N/A	$321	N/A	N/A	N/A
GW3015	N/A	$498	$498	N/A	$498	N/A	N/A	N/A
GD3015	N/A	$341	$341	N/A	$341	N/A	N/A	N/A
GW3315	N/A	$529	$529	N/A	$529	N/A	N/A	N/A
GD3315	N/A	$367	$367	N/A	$367	N/A	N/A	N/A
GW3615	N/A	$560	$560	N/A	$560	N/A	N/A	N/A
GD3615	N/A	$361	$361	N/A	$361	N/A	N/A	N/A

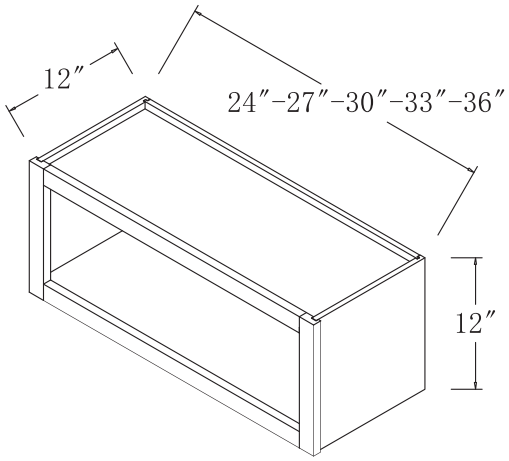

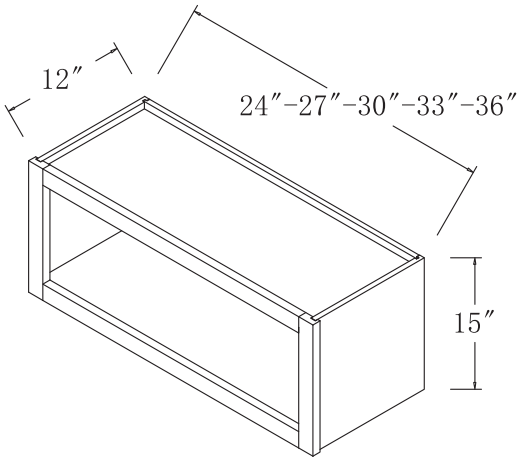

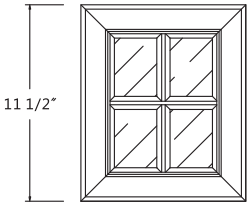

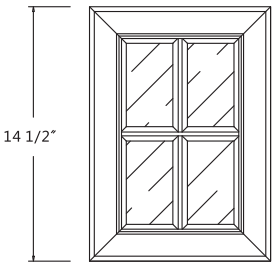

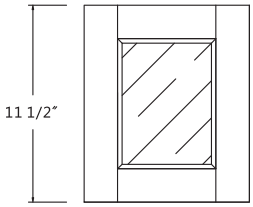

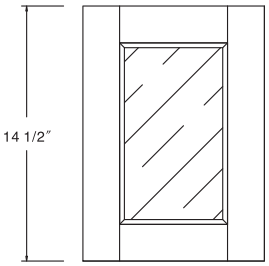

GLASS DOOR CORNER CABINET

	Price A		Price B		Price C		Price D (WH/VA)	Price E (SA)
	SE/CT	WW	PE/AL	BA	AN/DS/SG/GL/GR	NV/KS/WO		
GWDC2412	N/A	$660	$660	N/A	$660	N/A	N/A	N/A
GD1512	N/A	$193	$193	N/A	$193	N/A	N/A	N/A
GWDC2415	N/A	$676	$676	N/A	$676	N/A	N/A	N/A
GD1515	N/A	$198	$198	N/A	$198	N/A	N/A	N/A

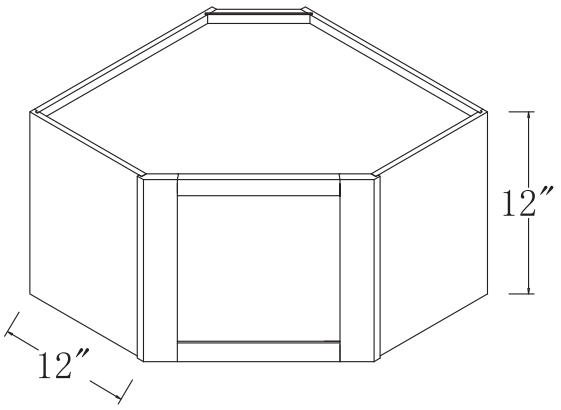

GWDC2412

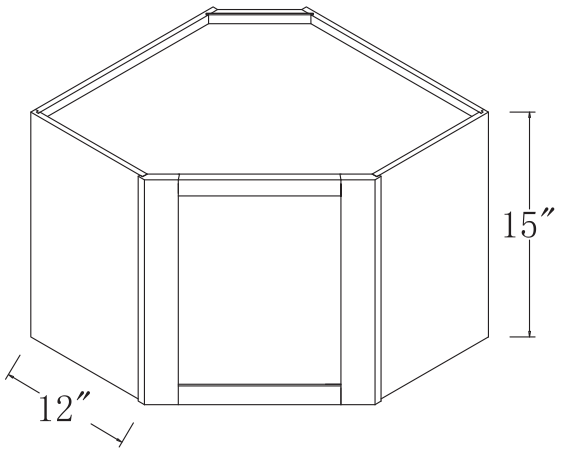

GWDC2415

VANITY SINK BASE

	Price A (SE/CT/WW)	Price B (PE/AL/BA)	Price C (AN/DS/SG/GL/GR/NV/KS/WO)	Price D (WH/VA)	Price E (SA)
FA2421	$578	$561	$549	$439	$642
FA3021	$669	$649	$636	$509	$744

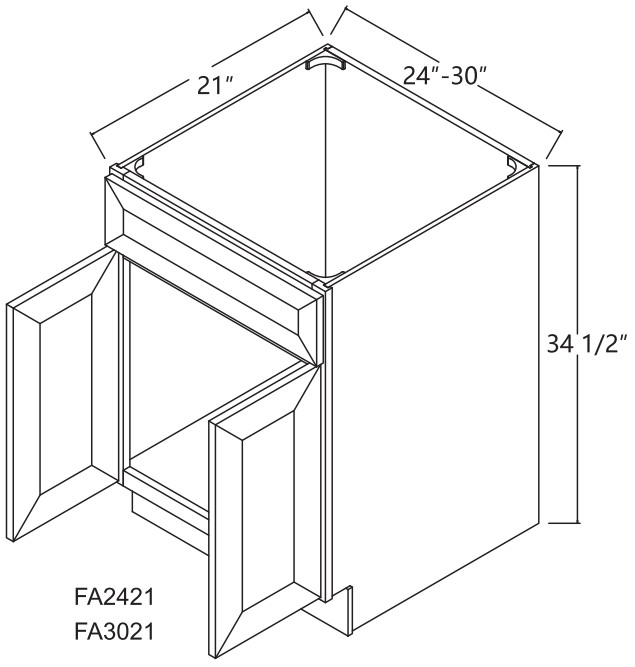

FA2421
FA3021

VANITY SINK BASE WITH 2 DRAWERS

	Price A（SE/CT/WW）	Price B（PE/AL/BA）	Price C（AN/DS/SG/GL/GR/NV/KS/WO）	Price D （WH/VA）	Price E （SA）
FA3021DL	$1096	$1063	$1041	$833	$1218
FA3021DR	$1096	$1063	$1041	$833	$1218

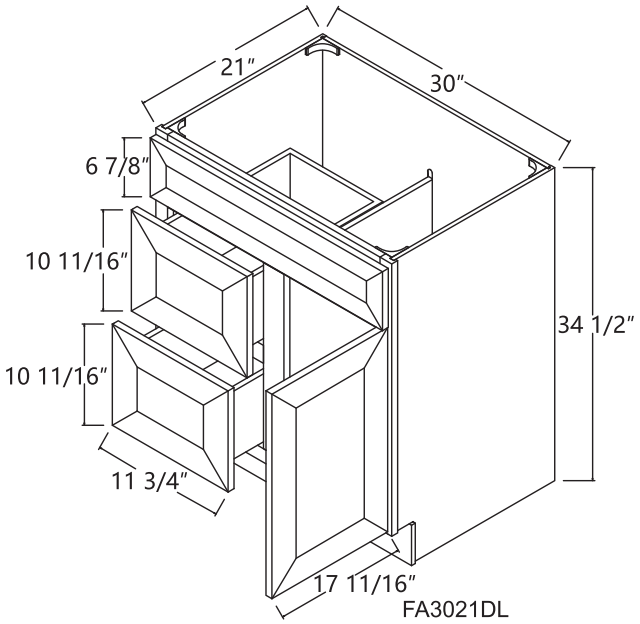

FA3021DL

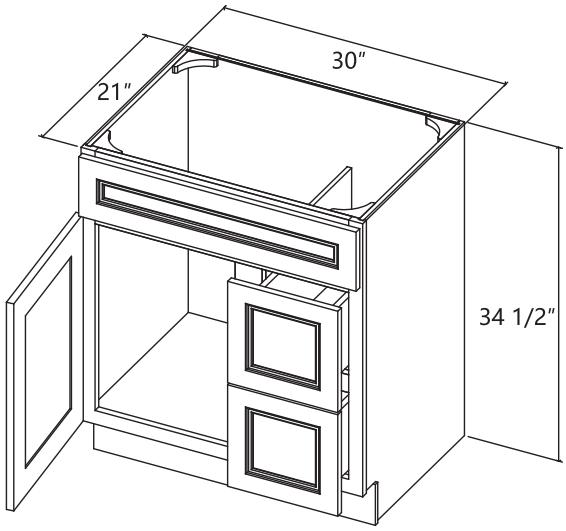

FA3021DR

VANITY SINK BASE WITH 2 DRAWERS

FA3621DL	$1187	$1151	$1128	$902	$1319
FA3621DR	$1187	$1151	$1128	$902	$1319

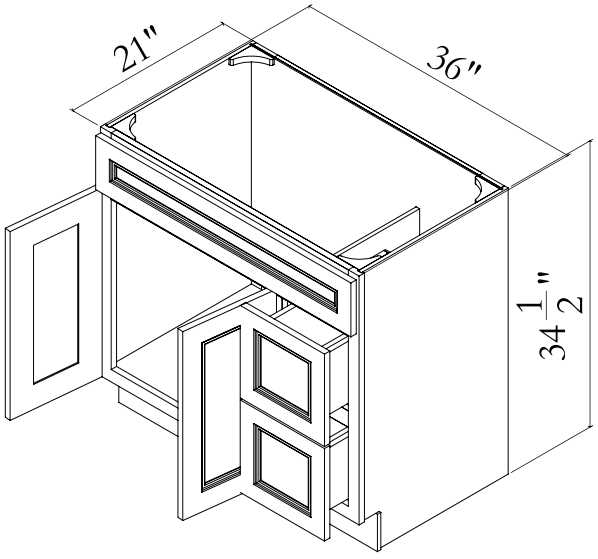

FA3621DR

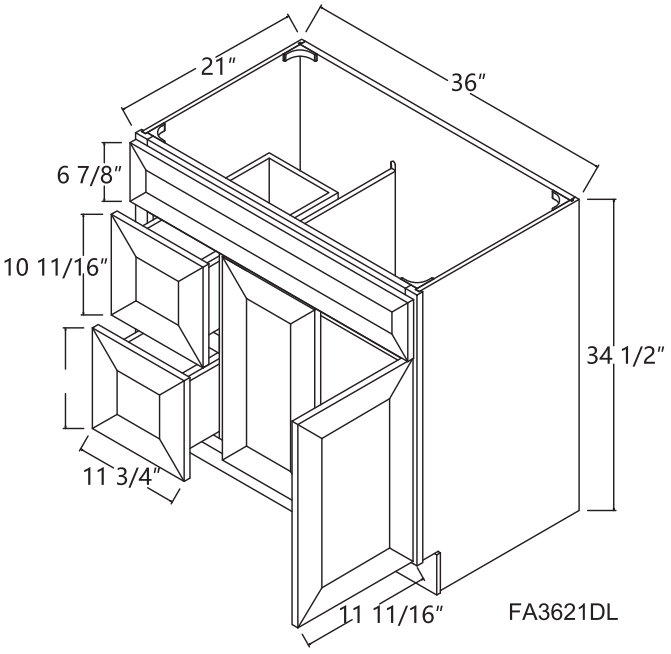

FA3621DL

KNEE DRAWER

	Price A (SE/CT/WW)	Price B (PE/AL/BA)	Price C (AN/DS/SG/GL/GR/NV/KS/WO)	Price D (WH/VA)	Price E (SA)
FD30	$263	$256	$250	$200	$293

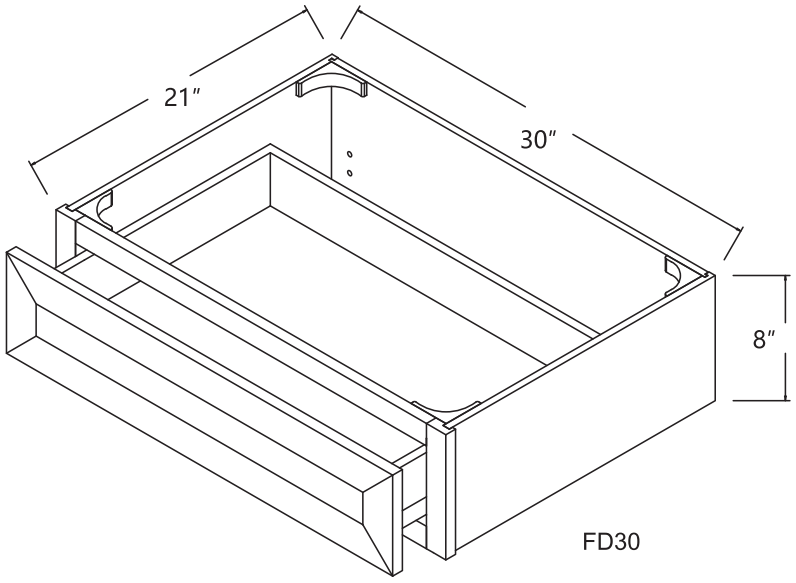

FD30

VANITY DRAWER BASE

SVA12D	$853	$828	$811	$649	$948
SVA15D	$946	$918	$899	$719	$1052
SVA18D	$1041	$1010	$989	$791	$1157

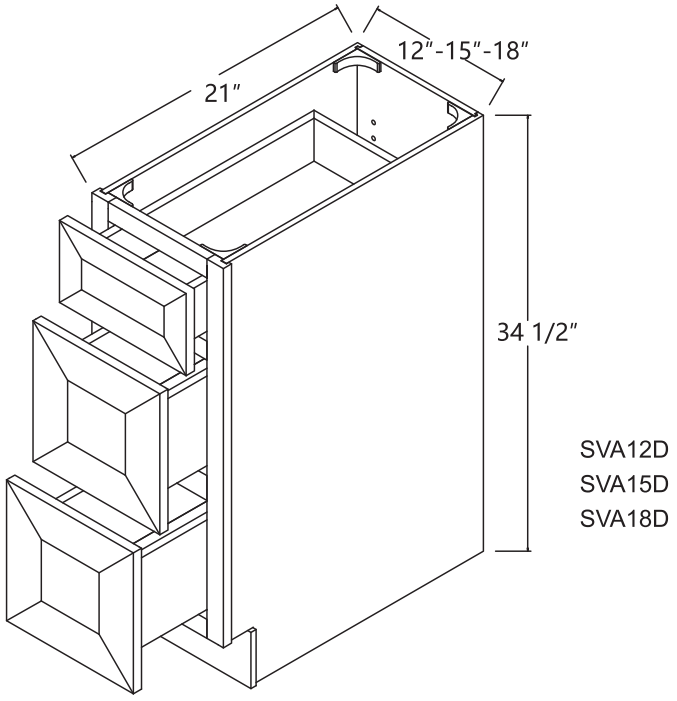

SVA12D
SVA15D
SVA18D

MIRROR

	Price A（SE/CT/WW）	Price B（PE/AL/BA）	Price C（AN/DS/SG/GL/GR/NV/KS/WO）	Price D （WH/VA）	Price E （SA）
SVAM2430	$308	$308	$308	$308	$361

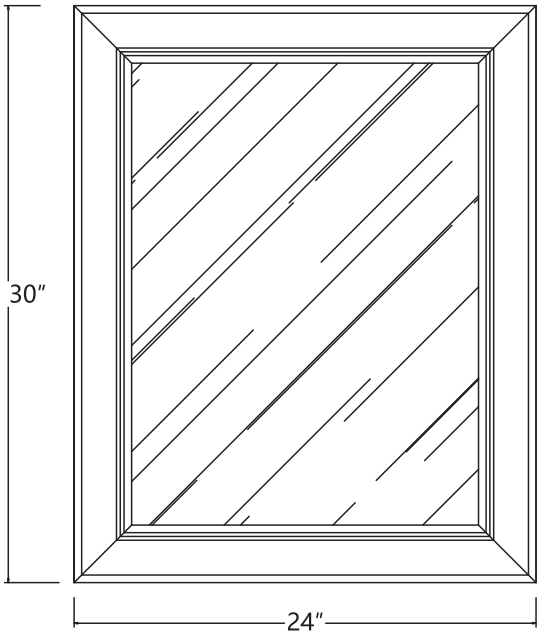

SVAM2430

CORBEL

	Price A（SE/CT/WW）	Price B		Price C（DS/SG/GL/GR/NV/KS/WO）	Price D （WH/VA）	Price E （SA）
		PE	AN/AL/BA			
CORBEL-1	$434	$421	N/A	N/A	N/A	N/A
CORBEL-2	N/A	N/A	$421	$434	$434	$508

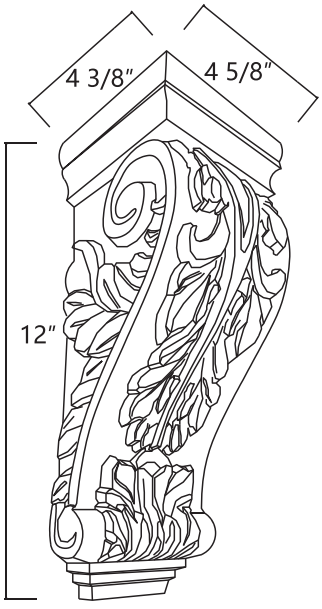

CORBEL-1

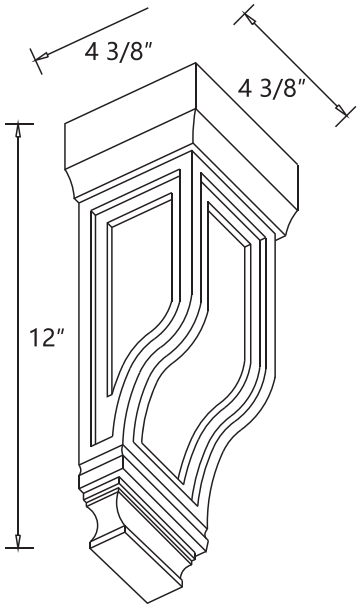

CORBEL-2

WALL DECORATIVE DOOR

	Price A		Price B		Price C		Price D (WH/VA)	Price E (SA)
		WW	PE/AL	BA	AN/DS/SG/GL/GR	NV/KS		
D1212W	N/A	$186	$186	N/A	$186	N/A	N/A	N/A
D1215W	N/A	$199	$199	N/A	$199	N/A	N/A	N/A
D1230W	$181		$176		$172		$138	$202
D1236W	$218		$212		$207		$166	$243
D1242W	$255		$247		$242		$194	$283

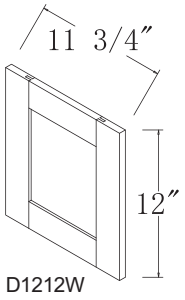

D1212W

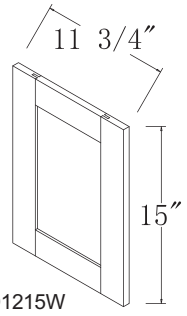

D1215W

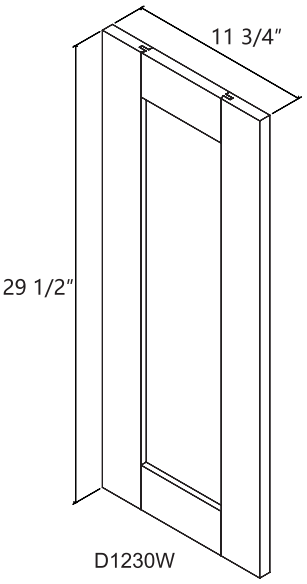

D1230W

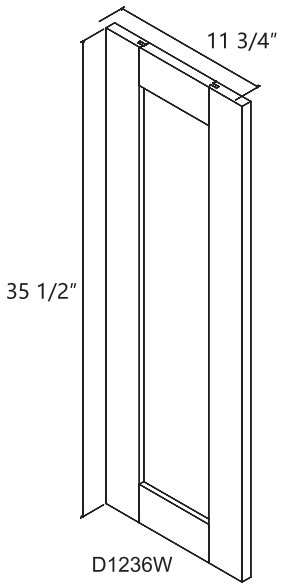

D1236W

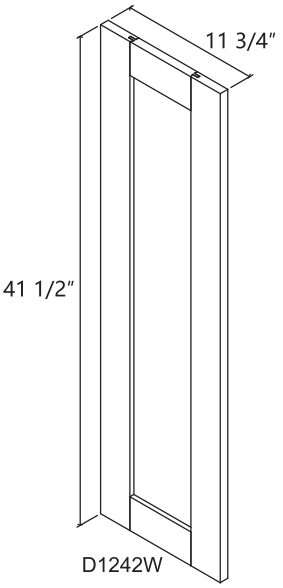

D1242W

BASE DECORATIVE DOOR

D2430B	$376	$365	$357	$286	$418

PANTRY SIDE DECORATIVE DOOR

D1249W	$336	$336	$336	$269	$394

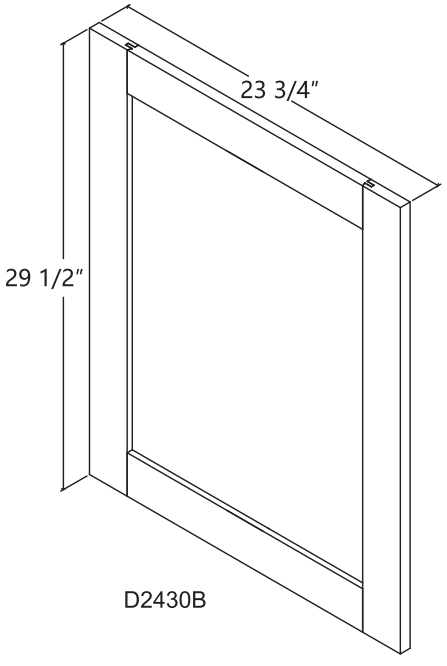

D2430B

NOTE: This item is for the bottom door shown in the picture only. Top Door is for your reference.

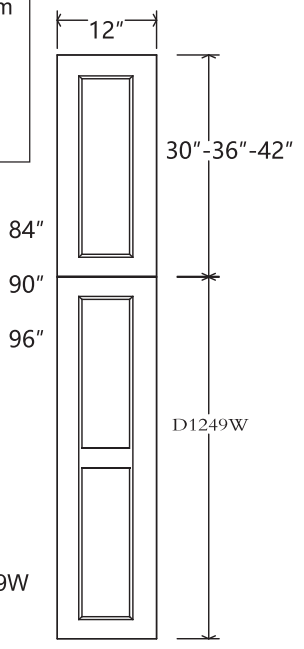

D1249W

DISH WASHER PANEL

	Price A（SE/CT/WW）	Price B（AN/PE/AL/BA）	Price C（DS/SG/GL/GR/NV/KS/WO）	Price D（WH/VA）	Price E（SA）
DWR3	$177	$172	$169	$169	$197

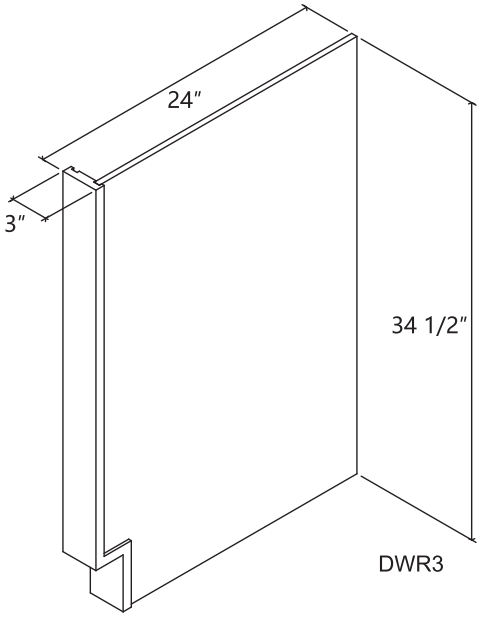

GLASS DOOR

	Price A（SE/CT/WW）	Price B（PE/AL/BA）	Price C（AN/DS/SG/GL/GR/NV/KS/WO）	Price D（WH/VA）	Price E（SA）
GD1230	$212	$205	$201	$161	$235
GD1530	$247	$239	$234	$187	$274
GD1830	$284	$276	$270	$216	$316
GD1236	$235	$228	$224	$179	$261
GD1536	$270	$262	$257	$205	$300
GD1836	$308	$299	$292	$234	$342
GD1242	$259	$251	$246	$197	$288
GD1542	$296	$287	$281	$225	$329
GD1842	$337	$327	$320	$256	$375

NOTE:
1.DS,AN,SG,GL,GR,NV,KS, WH,VA BA are NOT mullion with Frosted Glass.
2.SE is Mullion with Clear glass.
3.CT,AL, WW are Mullion with Frosted Glass
4.PE is pebbled Glass
5.SA ,WO are Clear Glass

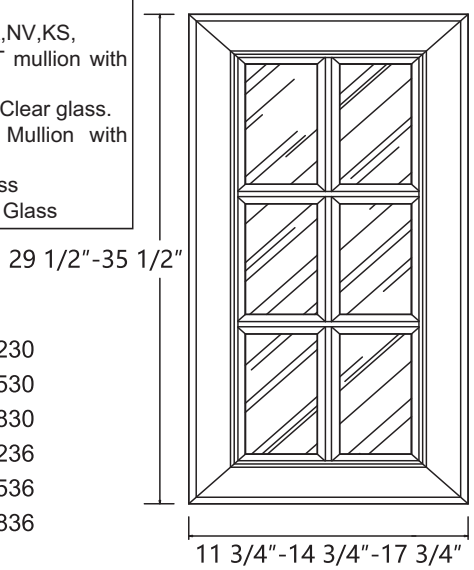

GD1230
GD1530
GD1830
GD1236
GD1536
GD1836

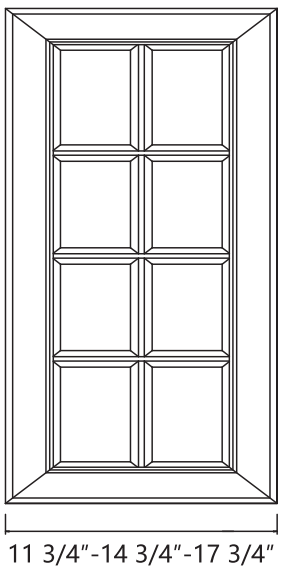

GD1242
GD1542
GD1842

HOOD COVER

	Price A（SE/CT/WW）	Price B（AN/PE/AL/BA）	Price C（DS/SG/GL/GR/NV/KS/WO）	Price D（WH/VA）	Price E（SA）
HC30	$1376	$1376	$1376	$1376	$1610
HC36	$1464	$1464	$1464	$1464	$1713
CHC39	N/A	$6340	$6340	$6340	$6840

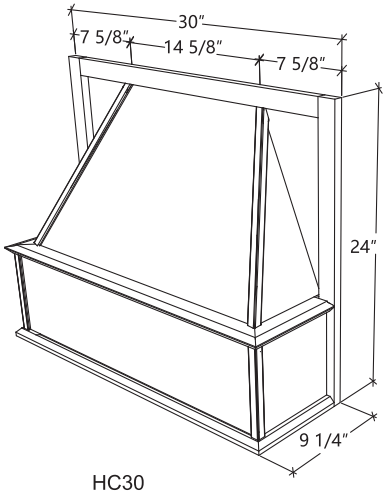

HC30

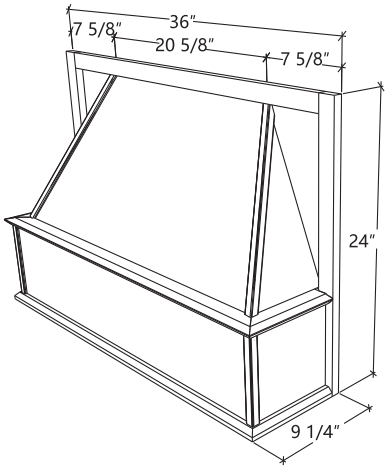

HC36

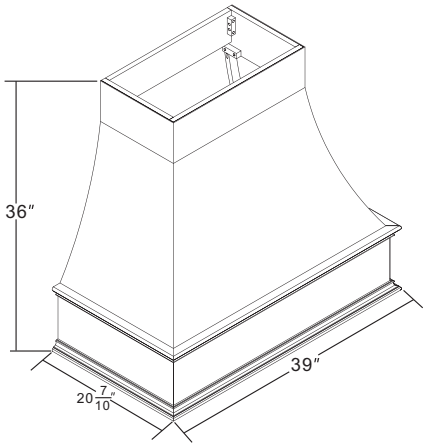

CHC39

NOTE: HC30 and HC36 to be installed between cabinets
CHC39 is a free standing HoodCover

SPOOL

	Price A（SE/CT/WW）	Price B		Price C（DS/SG/GL/GR/NV/KS/WO）	Price D（WH/VA）	Price E（SA）
		PE	AL/AN/BA			
SPOOL-1	$376	$365	N/A	N/A	N/A	N/A
SPOOL-2	N/A	N/A	$365	$357	$357	$418
SPOOL-3	N/A	N/A	$365	$357	$357	$418

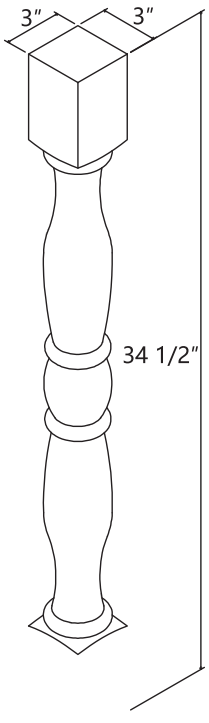

SPOOL -1

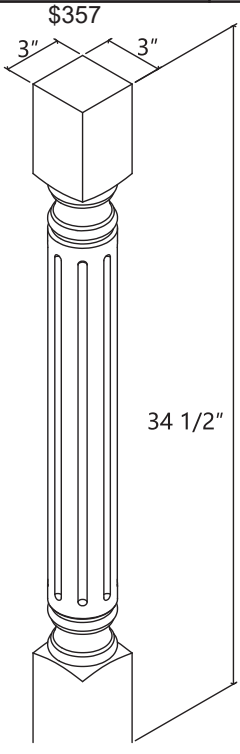

SPOOL-2

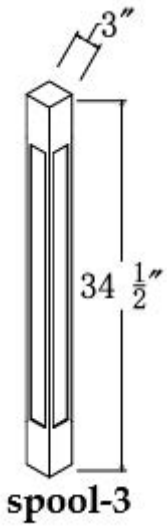

SPLIT SPOOL

	Price A（SE/CT/WW）	Price B（AN/PE/AL/BA）	Price C（DS/SG/GL/GR/NV/KS/WO）	Price D（WH/VA）	Price E（SA）
SS30	$188	$183	$179	$179	$209

Fluted Filler

PCVFF396	$156	$152	$148	$148	$174

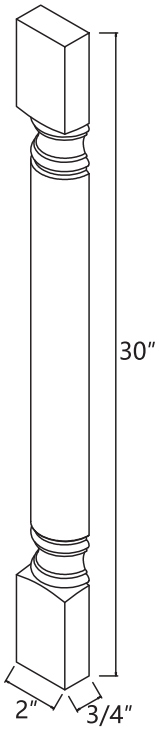

SS30



PCVFF396

OUTSIDE CORNER MOLDING

OCM8	$44	$43	$42	$42	$49

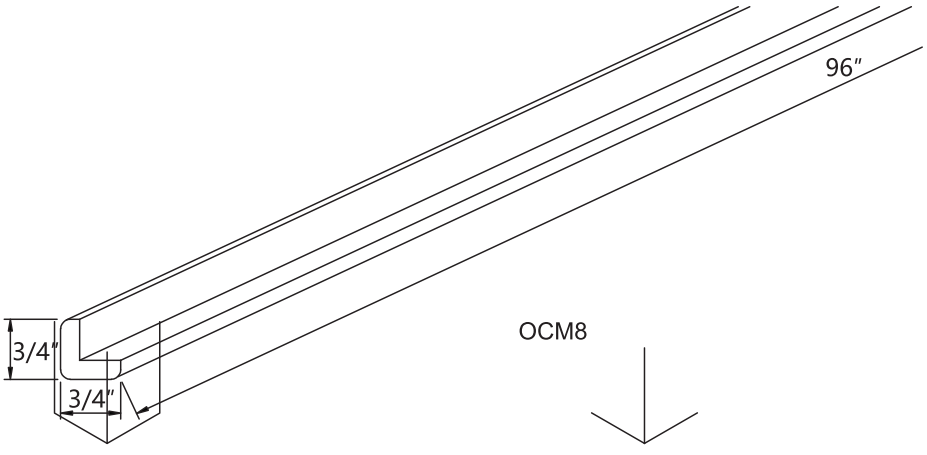

OCM8

CROWN MOLDING

	Price A（SE/CT/WW）	Price B			Price C（DS/SG/GL/GR/NV/KS/WO）	Price D （WH/VA）	Price E （SA）
		PE/AL	AN	BA			
ACM8-2	$308	$299	$299	N/A	N/A	N/A	N/A
ACM8-C	N/A	N/A	$299	$299	$299	$299	$350
CM8-C	N/A	N/A	$193	$193	$193	$193	$226
ACM8-S	N/A	N/A	$299	$299	$299	$299	$350

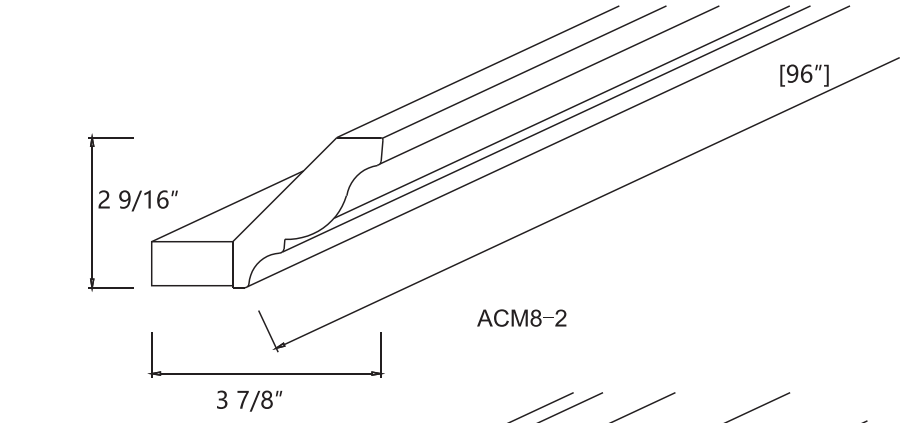

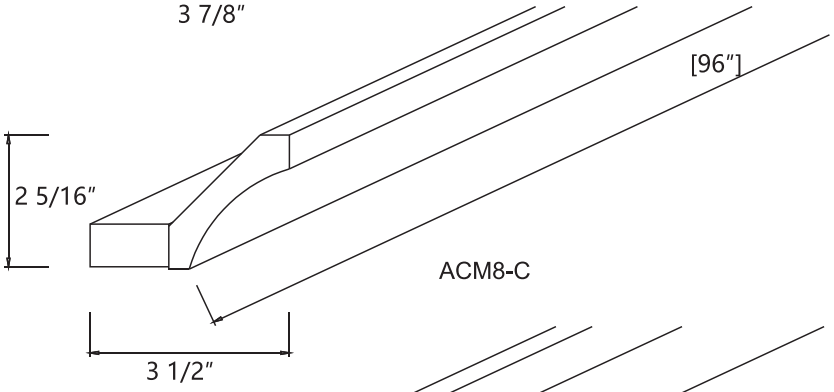

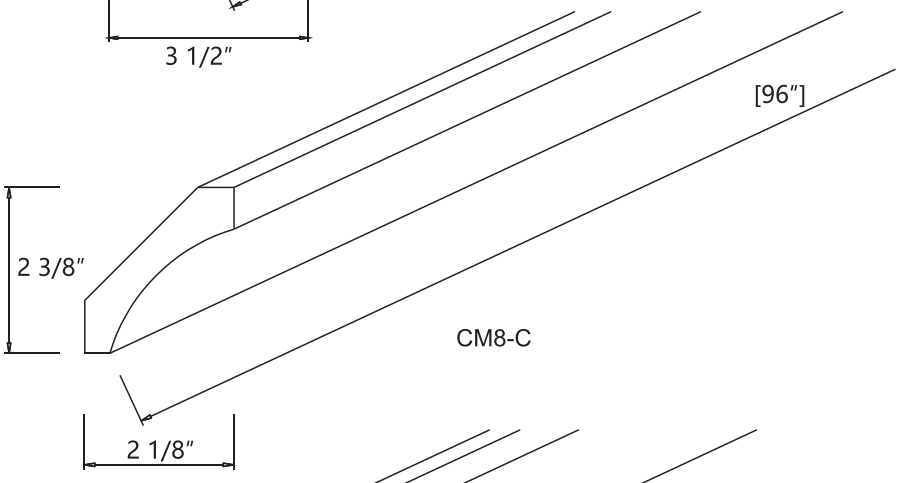

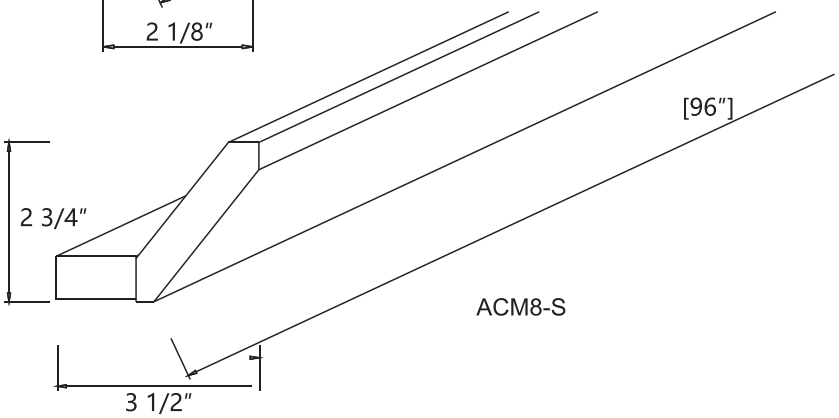

CROWN MOLDING

	Price A (SE/CT/WW)	Price B (AN/PE/AL/BA)	Price C		Price D (WH/VA)	Price E (SA)
			DS/GL/WO	SG/GR/NV/KS		
CCM8-1	$204	$198	$198	N/A	$198	$232
CCM8-2	$308	$299	$299	N/A	$299	$350

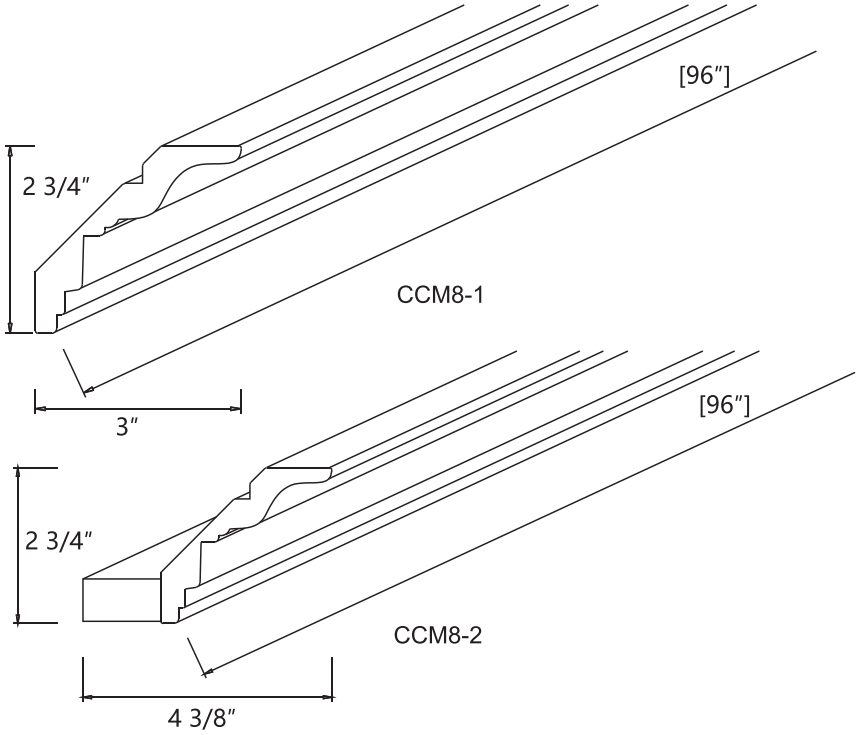

ROPE INSERT

	Price A (SE/CT/WW)	Price B		Price C (DS/SG/GL/GR/NV/KS/WO)	Price D (WH/VA)	Price E (SA)
		PE/AL/AN	BA			
RMI	$30	$29	N/A	N/A	N/A	N/A
DMI	$30	$29	N/A	N/A	N/A	N/A

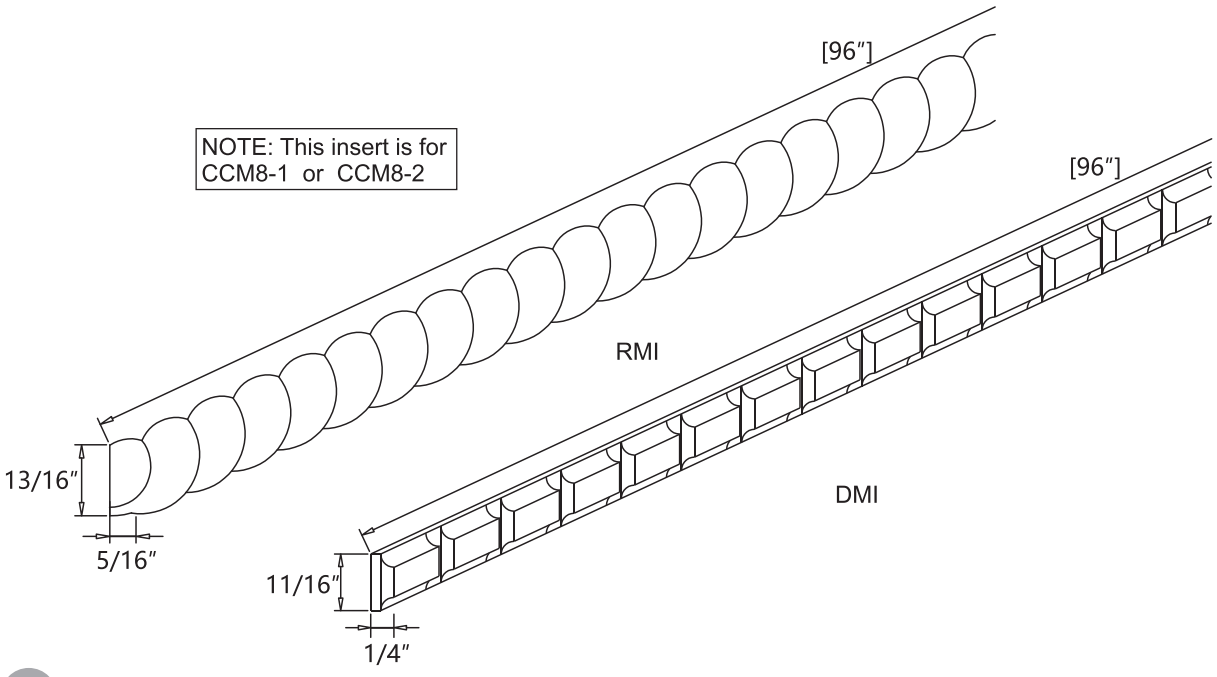

CHAIR RAIL MOLDING

	Price A (SE/CT/WW)	Price B (AN/PE/AL/BA)	Price C (DS/SG/GL/GR/NV/KS/WO)	Price D (WH/VA)	Price E (SA)
BCB150	$63	$61	$61	$61	$71

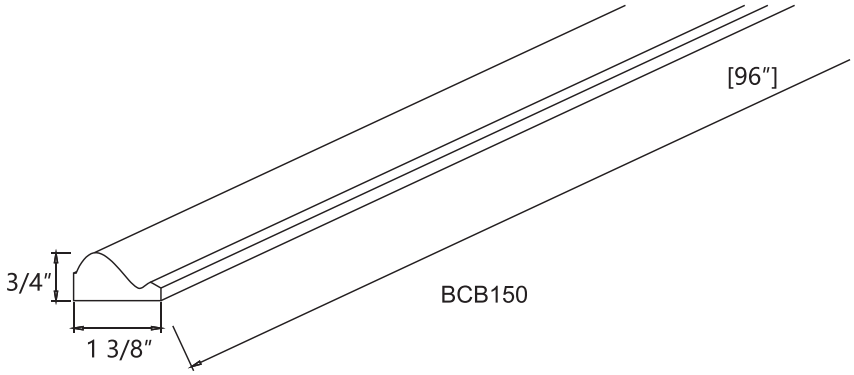

SCRIBE MOLDING

SM8	$30	$29	$28	$28	$16.31 33

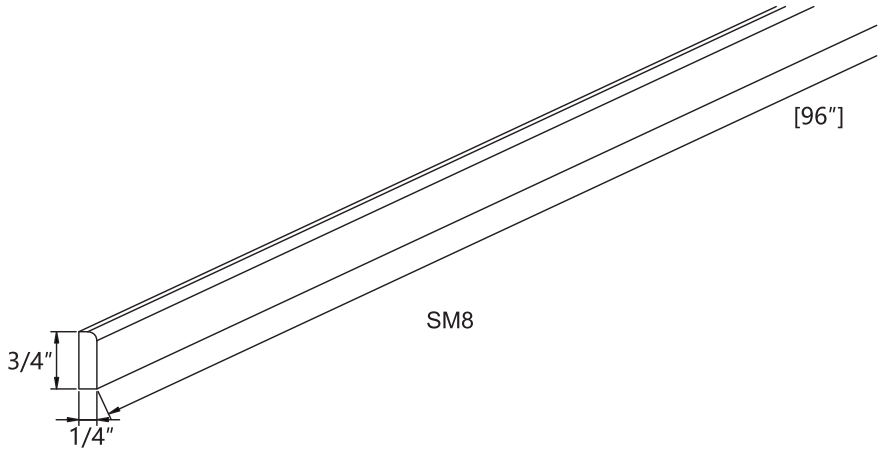

LIGHT RAIL MOLDING

	Price A (SE/CT/WW)	Price B		Price C (DS/SG/GL/GR/NV/KS/WO)	Price D (WH/VA)	Price E (SA)
		PE	AL/BA/AN			
TLR-1	$143	$139	N/A	N/A	N/A	N/A
TLR-2	N/A	N/A	$136	$136	$136	$159

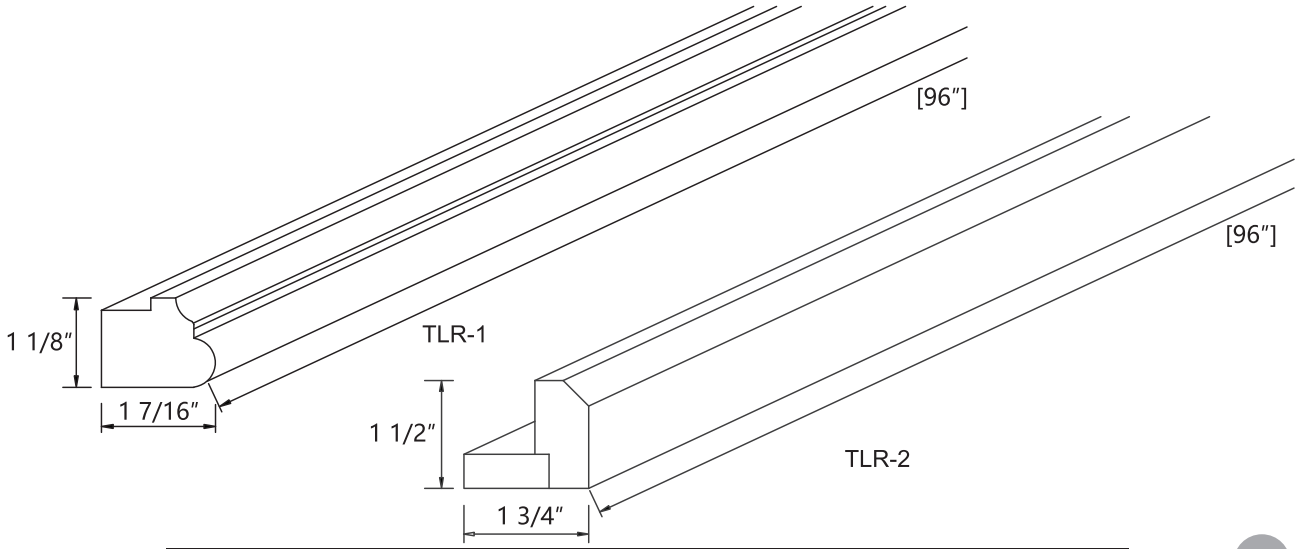

BASE BOARD MOLDING

	Price A (SE/CT/WW)	Price B (AN/PE/AL/BA)	Price C (DS/SG/GL/GR/NV/KS/WO)	Price D (WH/VA)	Price E (SA)
BM8-4.5	$204	$198	$194	$194	$227

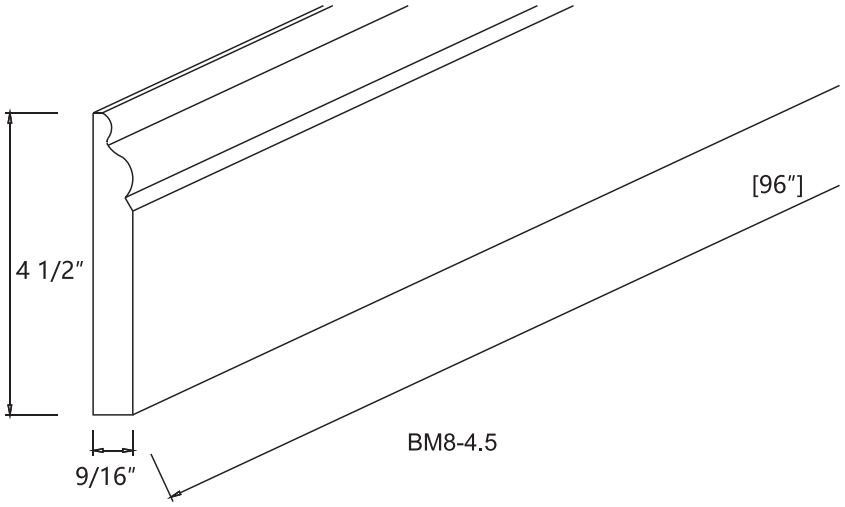

OGEE MOLDING

OGM8	$158	$153	$150	$150	$175

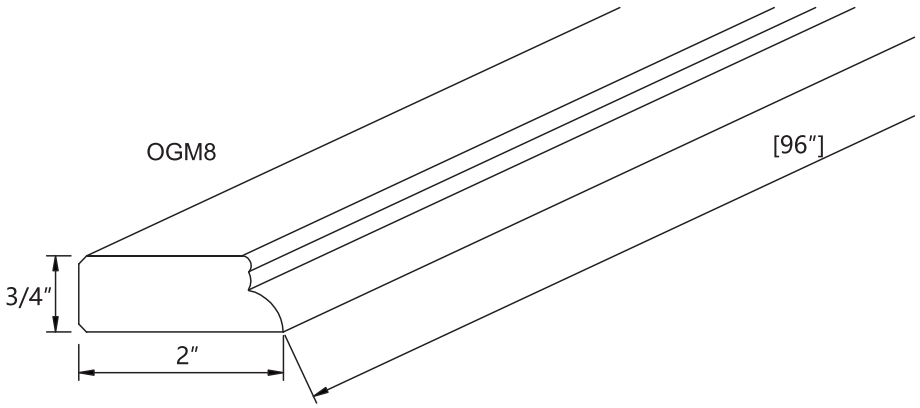

QUARTER ROUND

QR8	$63	$61	$60	$60	$70

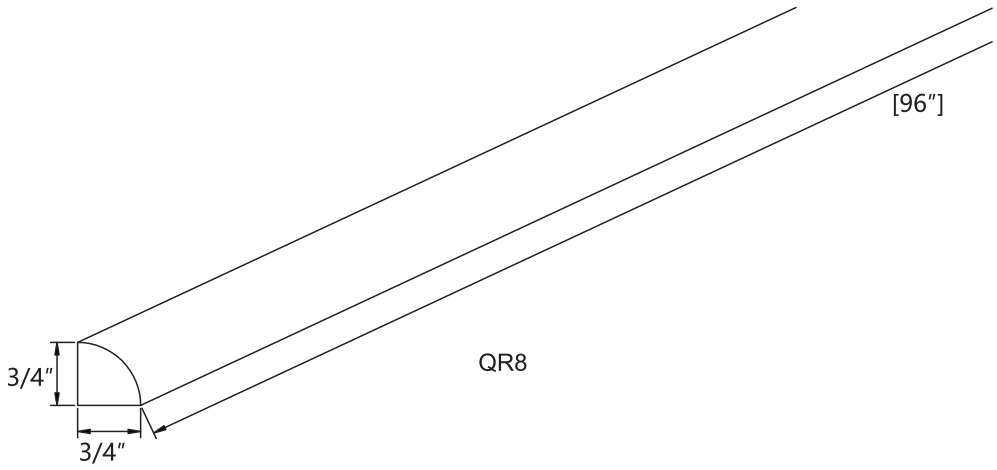

BACK PANEL

	Price A (SE/CT/WW)	Price B (AN/PE/AL/BA)	Price C (DS/SG/GL/GR/NV/KS/WO)	Price D (WH/VA)	Price E (SA)
BP3696	$277	$269	$264	$264	$308
BP4896	$366	$360	$356	$356	$417

NOTE: This panel is 1/4" thick.

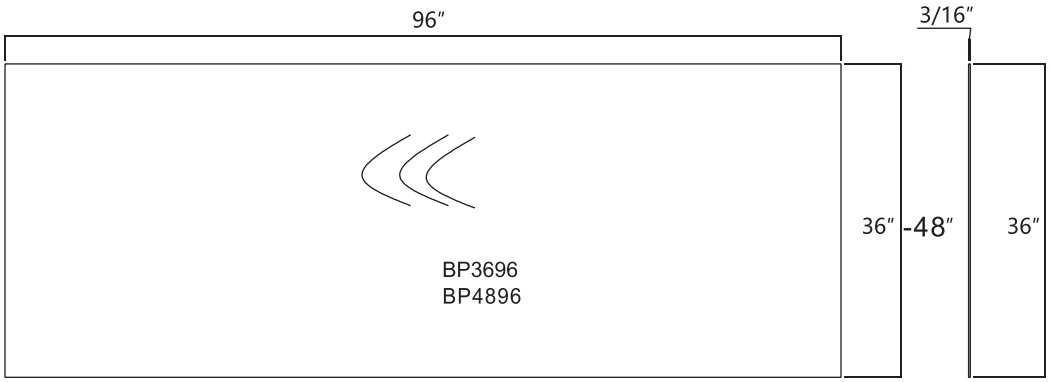

UNIVERSAL REFRIGERATOR PANEL

UREP3096	$572	$555	$544	$544	$636

Refrigerator Panel

RRP9624-3	$374	$363	$356	$356	$416

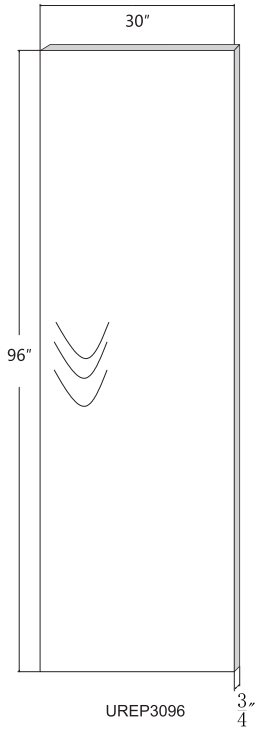

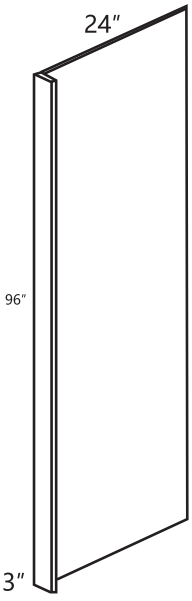

RRP9624-3

Note: 1.5" Return is available;
See filler section for WF1.5X96

WALL FILLER

	Price A (SE/CT/WW)	Price B (AN/PE/AL/BA)	Price C (DS/SG/GL/GR/NV/KS/WO)	Price D (WH/VA)	Price E (SA)
WF330	$50	$49	$48	$48	$56
WF336	$60	$58	$57	$57	$66
WF342	$70	$68	$66	$66	$77
WF396	$143	$139	$136	$136	$159
WF630	$99	$96	$94	$94	$110
WF636	$112	$109	$107	$107	$125
WF642	$126	$123	$120	$120	$140
WF696	$276	$268	$263	$263	$307
WF1.5x96	$128	$122	$120	$120	$141

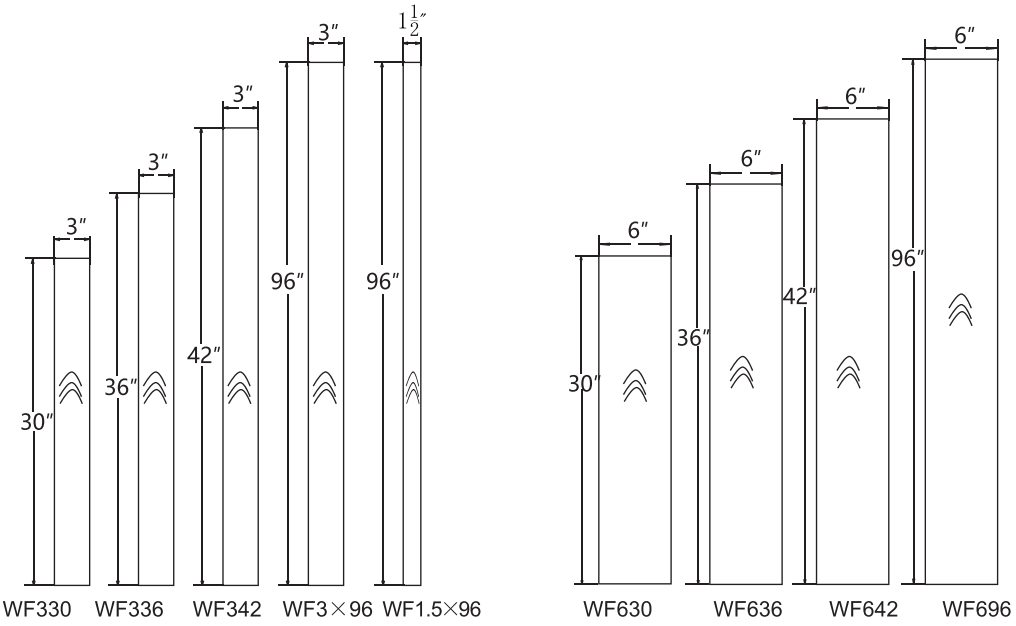

ROSETTE

FB3X3	$22	$21	$20	$20	$24

TOE KICK

TK8	$36	$35	$35	$35	$41

NOTE: Use on face of fluted filler.

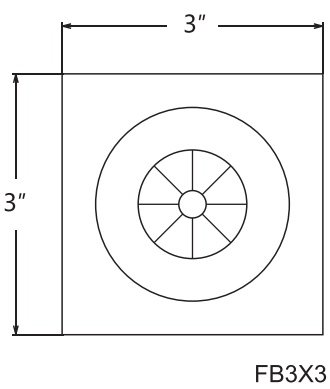

FB3X3

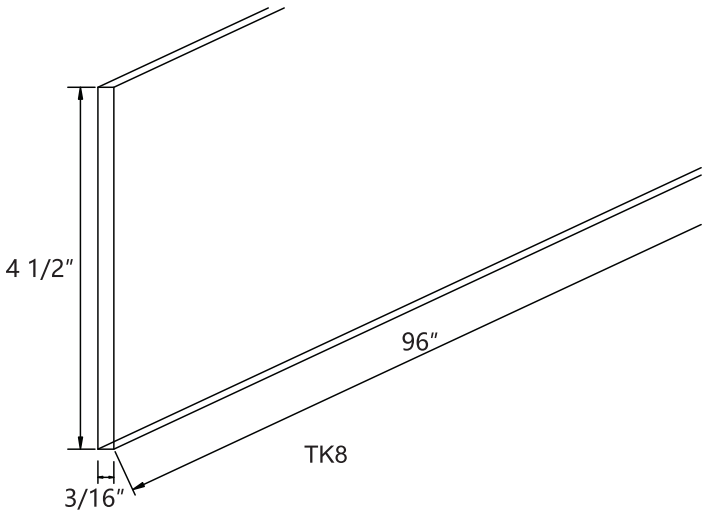

VALANCE

	Price A (SE/CT/WW)	Price B (AN/PE/AL/BA)	Price C (DS/SG/GL/GR/NV/KS/WO)	Price D (WH/VA)	Price E (SA)
V36	$77	$75	$73	$73	$85
V42	$91	$88	$86	$86	$101
V48	$105	$102	$100	$100	$116
V60	$135	$131	$128	$128	$150

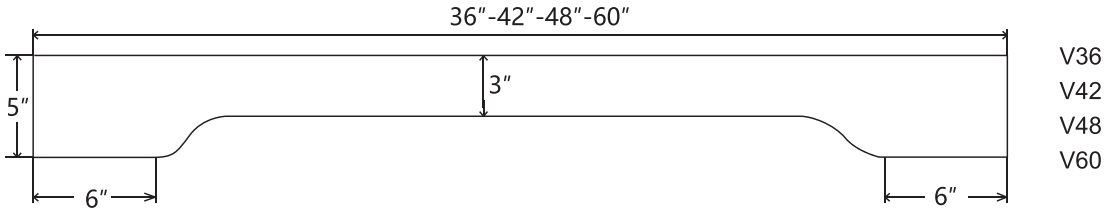

BIG VALANCE

VAL3612	$264	$264	$264	$264	$309
VAL4212	$286	$286	$286	$286	$335
VAL4812	$396	$396	$396	$396	$464

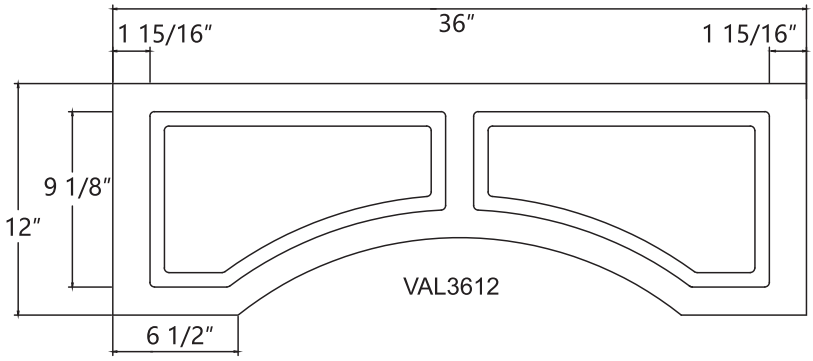

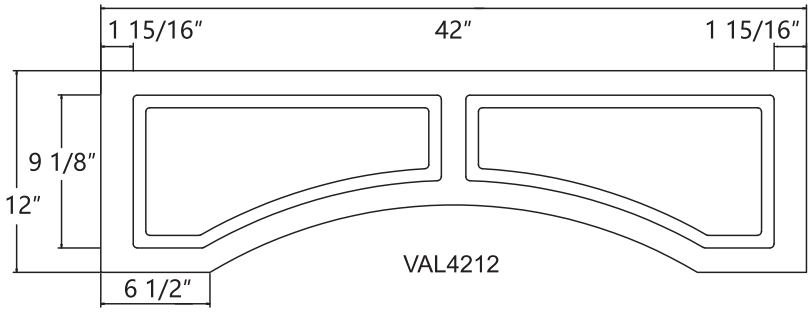

FLOATING SHELF

WSF3612	$ N/A	$440	$440	$440	$440
WSF4812	$N/A	$500	$500	$500	$500

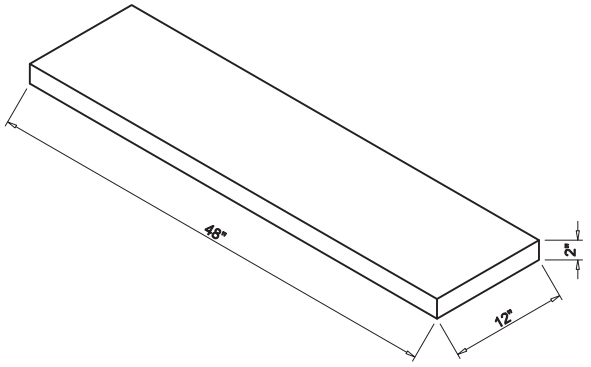

WASTE BASKET

	Price A (SE/CT/WW)	Price B (AN/PE/AL/BA)	Price C (DS/SG/GL/GR/NV/KS/WO)	Price D (WH/VA)	Price E (SA)
WB15	$496	$496	$496	$496	$496
WB18	$534	$534	$534	$534	$534
WB21	$578	$578	$578	$578	$578

NOTE:
Wb15 Comes with1 Plastic Trash Can.
WB18,WB21 Waste Basket comes with 2 Plastic Trash Cans.

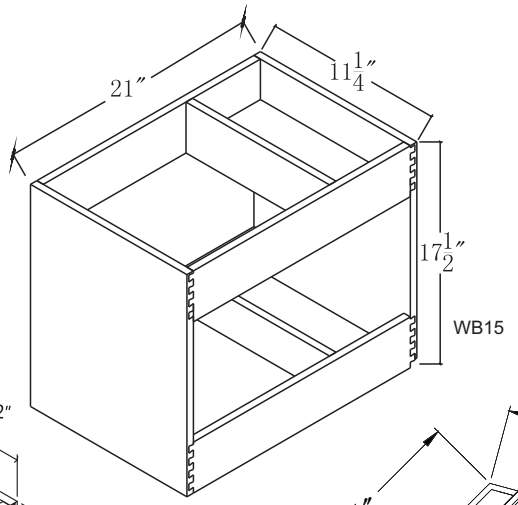

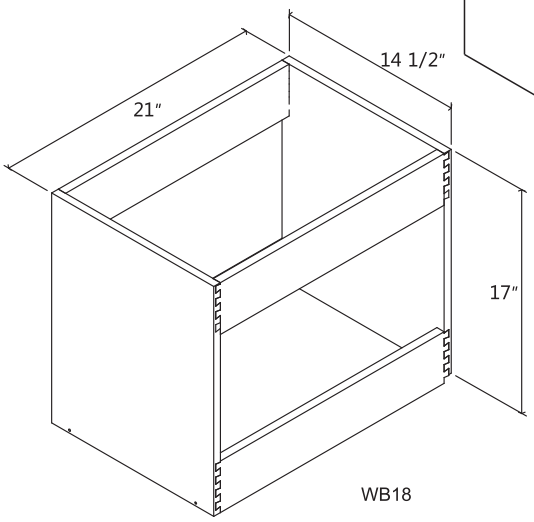

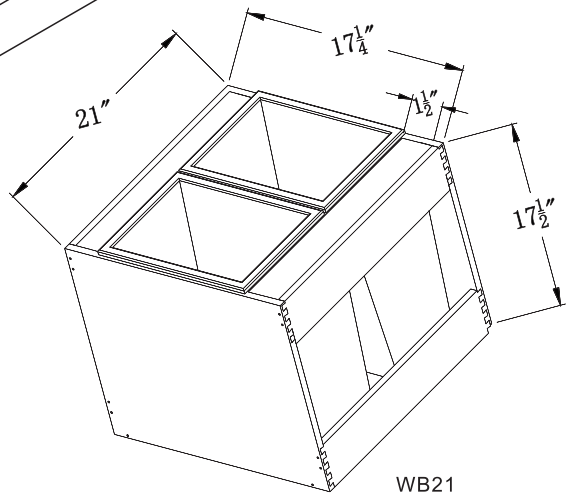

LAZY SUSAN TRAY

BLS-Tray	$270	$270	$270	$270	$270

NOTE: There are 2 Tray as one set. Price shown is for one set.

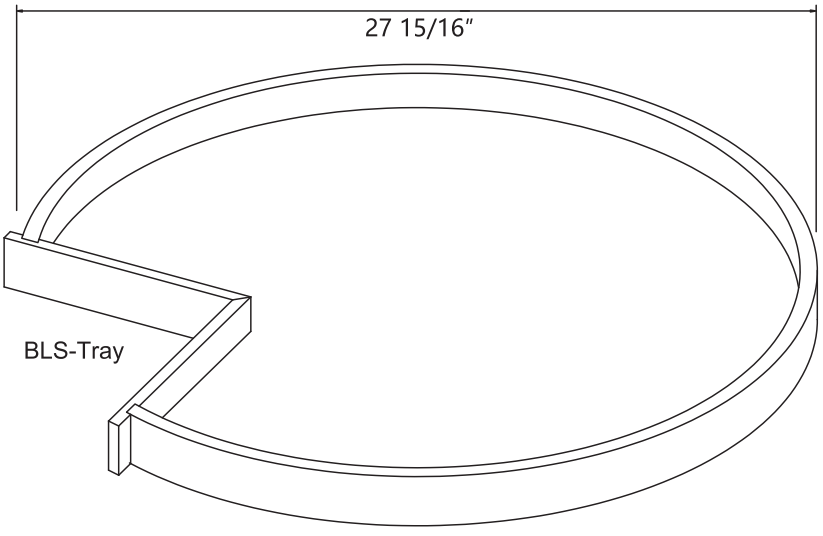

ROLL OUT TRAY

	Price A（SE/CT/WW）	Price B（AN/PE/AL/BA）	Price C（DS/SG/GL/GR/NV/KS/WO）	Price D（WH/VA）	Price E（SA）
RD15	$180	$180	$180	$180	$180
RD18	$189	$189	$189	$189	$189
RD21	$200	$200	$200	$200	$200
RD24	$214	$214	$214	$214	$214
RD27	$225	$225	$225	$225	$225
RD30	$236	$236	$236	$236	$236
RD33	$243	$243	$243	$243	$243
RD36	$257	$257	$257	$257	$257

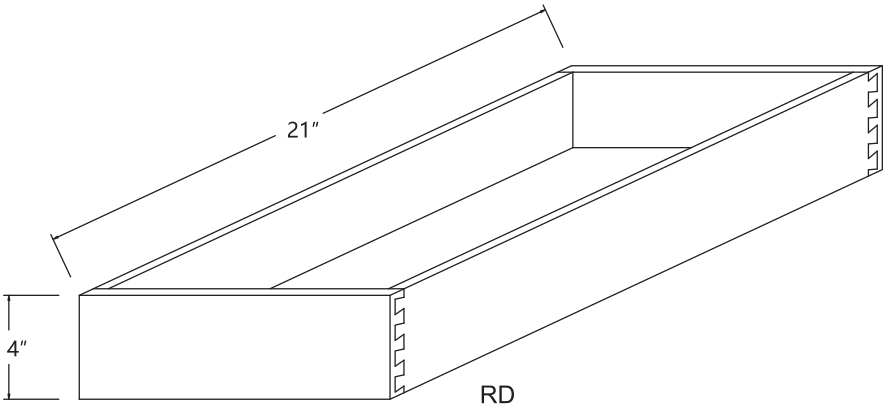

RD

DRAWER ACCESSORIES

SO 15-21	$300	$300	$300	$300	$300
SO 24-30	$380	$380	$380	$380	$380
SR30	$400	$400	$400	$400	$400
TILT OUT TRAYS	$214	$214	$214	$214	$214

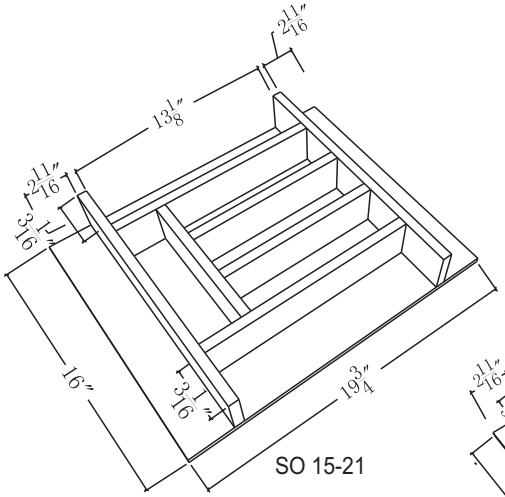

SO 15-21

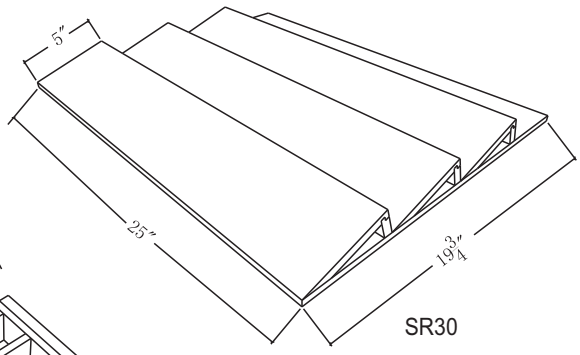

SR30

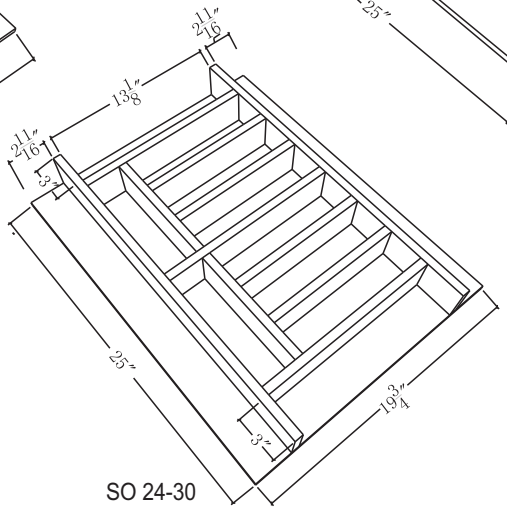

SO 24-30

SAMPLE DOOR

	Price A (SE/CT/WW)	Price B (AN/PE/AL/BA)	Price C (DS/SG/GL/GR/NV/KS/WO)	Price D (WH/VA)	Price E (SA)
SD1215	$78	$78	$78	$78	$78
Display Center	$1708				

Note: Display Center comes assembled with 16 loose sample doors.

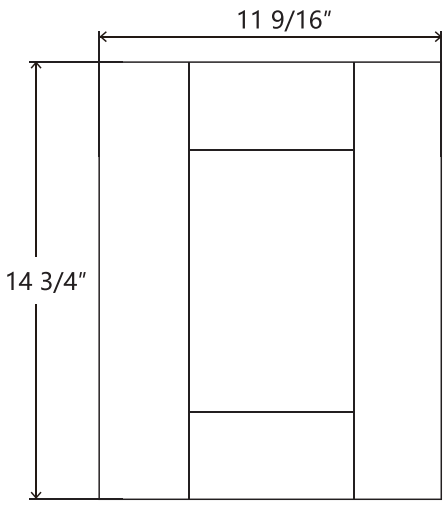

SD1215

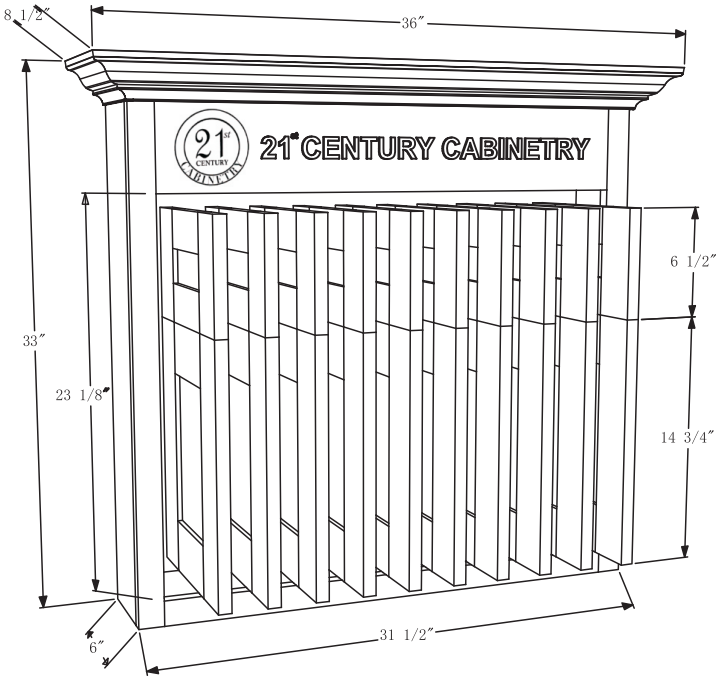

TOUCH UP KIT

touch up kit	$78	$78	$78	$78	$78





21st CENTURY CABINETRY®

21st Century Cabinetry Where Quality Meets Value



21st CENTURY CABINETRY®

Quality cabinets for your perfect kitchen

21st Century Cabinetry



21st Century Cabinetry

540 Glen Ave, Moorestown NJ 08057

Tel:(856)988-1717/1188 Fax: (856)614-4168

Email:sales@21stcenturycd.com

www.21stcenturycd.com