PROCRAFT
Professionally Crafted Cabinets
CABINETRY

CABINETRY SPECIFICATION GUIDE | 2020

Professionally
Crafted Cabinets

TABLE OF CONTENTS

03

CABINET CONSTRUCTION BASICS

05

WALL CABINET DESIGN AND SPECIFICATIONS

23

BASE CABINET DESIGN AND SPECIFICATIONS

35

TALL CABINET DESIGN AND SPECIFICATIONS

39

VANITY CABINET DESIGN AND SPECIFICATIONS

44

ACCESSORIES

59

ORDERING POLICIES

71

MODIFICATIONS

CABINET CONSTRUCTION



⅝" solid wood dovetail construction on all sides of drawer box with UV clear coat on all exposed surfaces. Drawer glides are all steel constructed soft close mechanism. ⅜" plywood drawer bottom.

Solid wood corner bracket for extra stability.

½" plywood panel dadoes into face frame. Side reveal is ¼" before skin is applied.



¾" adjustable plywood shelf, finished with Birch wood veneer top and bottom edge banded on the front leading edge.

All hinges are 6-way adjustable and have an internal soft close mechanism on each hinge.

½" furniture grade plywood coated with UV clear coat

4 ½" high x 2 ½" deep ½" thick toe boards



WALL CABINET DESIGN AND SPECIFICATIONS

WALL CABINET SPECIFICATIONS

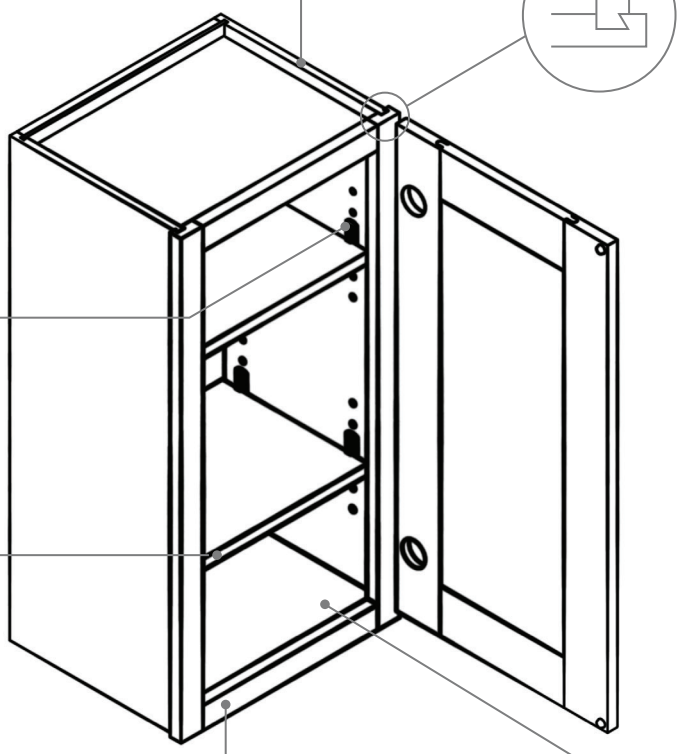

12/15/18/21/24" HIGH

WALL CABINETS

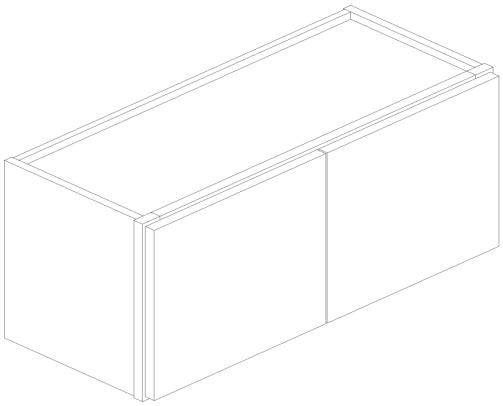

DOUBLE DOOR

WxHxD	SKU	MINIMAL SERIES	ESSENTIAL SERIES
30"x12"x12"	W3012	•	•
30"x15"x12"	W3015	•	•
30"x18"x12"	W3018	•	•
30"x21"x12"	W3021	•	•
36"x12"x12"	W3612	•	•
36"x15"x12"	W3615	•	•
36"x18"x12"	W3618	•	•
36"x21"x12"	W3621	•	•

*Modifications available

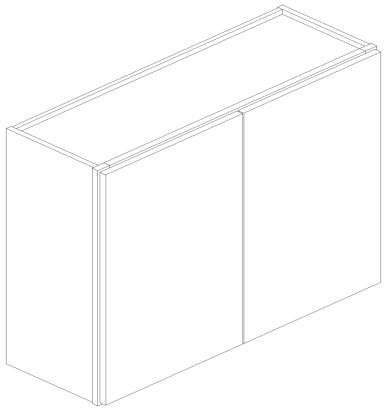

DOUBLE DOOR
SINGLE SHELF

WxHxD	SKU	MINIMAL SERIES	ESSENTIAL SERIES
30"x24"x12"	W3024	•	•
33"x24"x12"	W3324	•	•
36"x24"x12"	W3624	•	•

*Modifications available

24" DEEP

WALL CABINETS

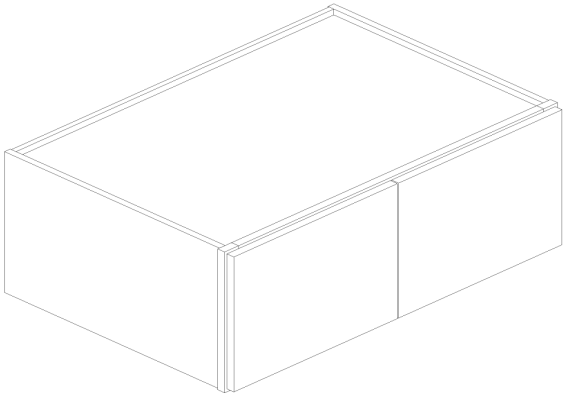

DOUBLE DOOR

WxHxD	SKU	MINIMAL SERIES	ESSENTIAL SERIES
36"x12"x24"	W361224	•	•
36"x15"x24"	W361524	•	•
36"x18"x24"	W361824	•	•
36"x21"x24"	W362124	•	•
42"x12"x24"	W421224	•	•
48"x12"x24"	W481224	•	•

*Modifications available

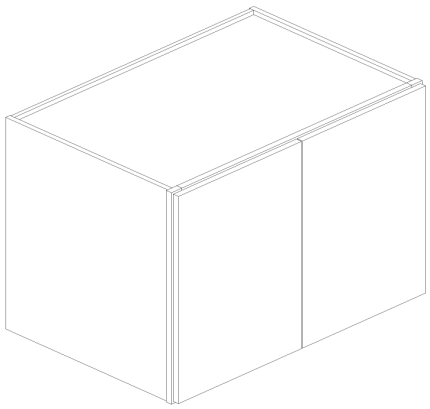

DOUBLE DOOR
SINGLE SHELF

WxHxD	SKU	MINIMAL SERIES	ESSENTIAL SERIES
36"x24"x24"	W362424	•	•

*Modifications available

18" HIGH

WALL CABINETS

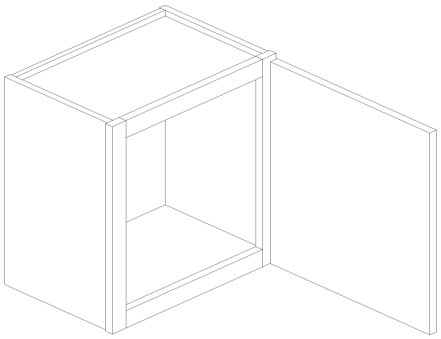

SINGLE DOOR

WxHxD	SKU	MINIMAL SERIES	ESSENTIAL SERIES
18"x18"x12"	W1818	•	•

*Modifications available

30" HIGH

WALL CABINETS

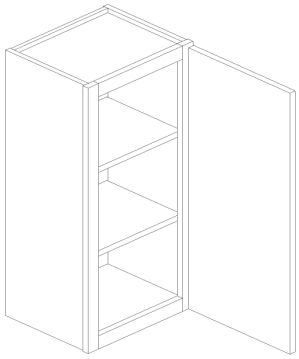

SINGLE DOOR
DOUBLE SHELF

WxHxD	SKU	MINIMAL SERIES	ESSENTIAL SERIES
9"x30"x12"	W0930	•	•
12"x30"x12"	W1230	•	•
15"x30"x12"	W1530	•	•
18"x30"x12"	W1830	•	•
21"x30"x12"	W2130	•	•

*Modifications available

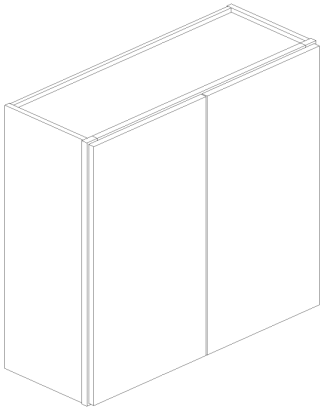

DOUBLE DOOR
DOUBLE SHELF

WxHxD	SKU	MINIMAL SERIES	ESSENTIAL SERIES
24"x30"x12"	W2430	•	•
27"x30"x12"	W2730	•	•
30"x30"x12"	W3030	•	•
33"x30"x12"	W3330	•	•
36"x30"x12"	W3630	•	•
39"x30"x12"	W3930	•	•
42"x30"x12"	W4230	•	•

*Modifications available

36" HIGH

WALL CABINETS

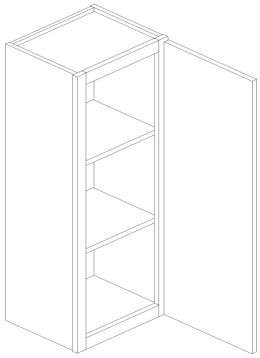

SINGLE DOOR
DOUBLE SHELF

WxHxD	SKU	MINIMAL SERIES	ESSENTIAL SERIES
9"x36"x12"	W0936	•	•
12"x36"x12"	W1236	•	•
15"x36"x12"	W1536	•	•
18"x36"x12"	W1836	•	•
21"x36"x12"	W2136	•	•

*Modifications available

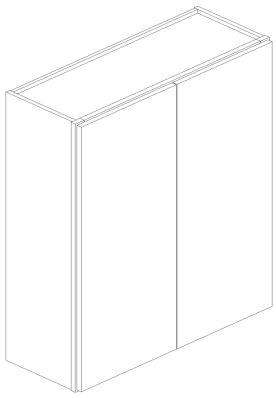

DOUBLE DOOR
DOUBLE SHELF

WxHxD	SKU	MINIMAL SERIES	ESSENTIAL SERIES
24"x36"x12"	W2436	•	•
27"x36"x12"	W2736	•	•
30"x36"x12"	W3036	•	•
33"x36"x12"	W3336	•	•
36"x36"x12"	W3636	•	•
39"x36"x12"	W3936	•	•
42"x36"x12"	W4236	•	•

*Modifications available

42" HIGH

WALL CABINETS

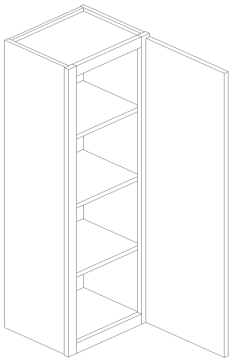

SINGLE DOOR
TRIPLE SHELF

WxHxD	SKU	MINIMAL SERIES	ESSENTIAL SERIES
9"x42"x12"	W0942	•	•
12"x42"x12"	W1242	•	•
15"x42"x12"	W1542	•	•
18"x42"x12"	W1842	•	•
21"x42"x12"	W2142	•	•

*Modifications available

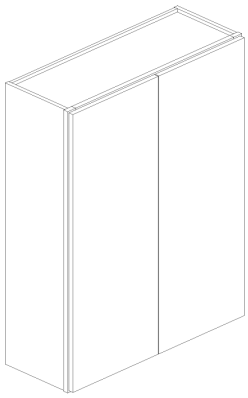

DOUBLE DOOR
TRIPLE SHELF

WxHxD	SKU	MINIMAL SERIES	ESSENTIAL SERIES
24"x42"x12"	W2442	•	•
27"x42"x12"	W2742	•	•
30"x42"x12"	W3042	•	•
33"x42"x12"	W3342	•	•
36"x42"x12"	W3642	•	•
39"x42"x12"	W3942	•	•
42"x42"x12"	W4242	•	•

*Modifications available

WALL ANGLE

END OF RUN CABINETS

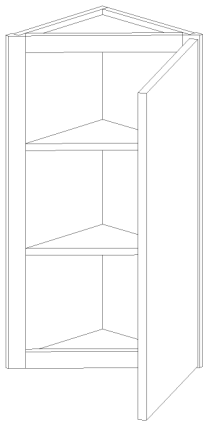

WxHxD	SKU	MINIMAL SERIES	ESSENTIAL SERIES
30"x12"x12"	WAE30	•	•
36"x12"x12"	WAE36	•	•

*Comes standard with finished interior

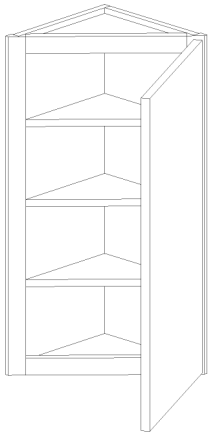

WxHxD	SKU	MINIMAL SERIES	ESSENTIAL SERIES
42"	WAE42	•	•

*Comes standard with finished interior

WALL OPEN SHELF

END OF RUN CABINETS

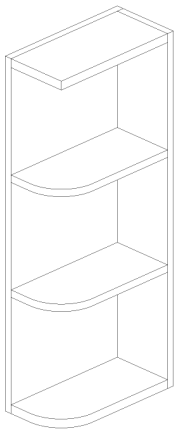

WxHxD	SKU	MINIMAL SERIES	ESSENTIAL SERIES
6"x30"x12"	WOES0630	•	•
6"x36"x12"	WOES0636	•	•

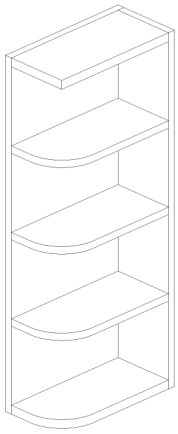

WxHxD	SKU	MINIMAL SERIES	ESSENTIAL SERIES
6"x42"x12"	WOES0642	•	•

SQUARE

WALL CORNER CABINETS

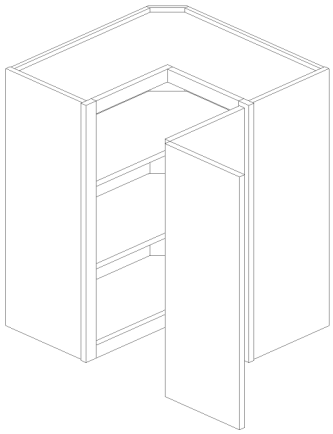

WxHxD	SKU	MINIMAL SERIES	ESSENTIAL SERIES
24"x30"x24"	WSC2430	•	•
24"x36"x24"	WSC2436	•	•
24"x42"x24"	WSC2442	•	•

*Modifications available
30" & 36" high cabinets have two shelves | 42" high cabinets have three shelves

24" DIAGONAL CORNER APPLIANCE GARAGE

WALL CORNER CABINETS

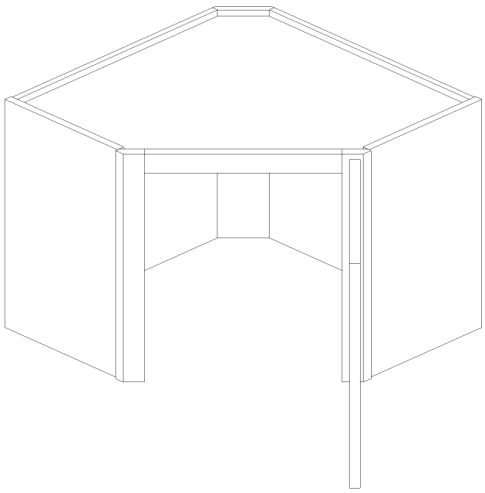

WxHxD	SKU	MINIMAL SERIES	ESSENTIAL SERIES
24"x18"x24"	WDC2418	•	•

*Modifications available | Does not have bottom rail or floor

DIAGONAL

WALL CORNER CABINETS

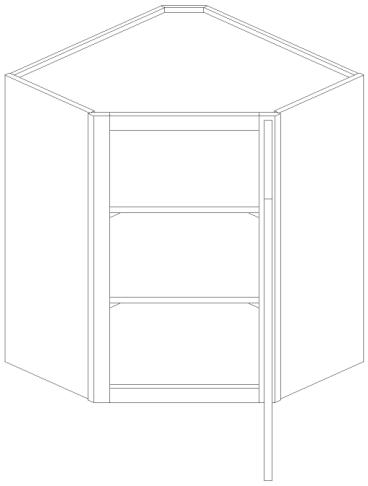

WxHxD	SKU	MINIMAL SERIES	ESSENTIAL SERIES
24"x30"x12"	WDC2430	•	•
24"x36"x12"	WDC2436	•	•
24"x42"x12"	WDC2442	•	•
27"x36"x15"	WDC273615	•	•
27"x42"x15"	WDC274215	•	•

*Modifications available
30" & 36" high cabinets have two shelves | 42" high cabinets have three shelves

WALL BLIND

WALL CORNER CABINETS

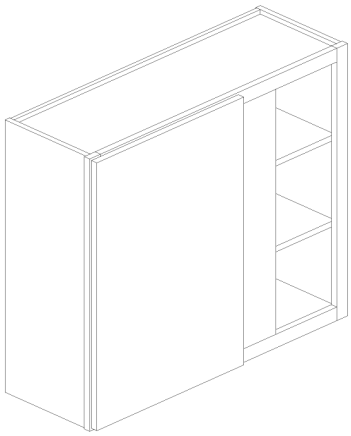

TECHNICAL SPECS

WBC30
Door Opening 11.5"
Center Stile 6.5"
Blind Opening 9"

WBC36
Door Opening 17.5"
Center Stile 6.5"
Blind Opening 9"

WxHxD	SKU	MINIMAL SERIES	ESSENTIAL SERIES
30"x30"x12"	WBC3030	•	•
30"x36"x12"	WBC3630	•	•
36"x30"x12"	WBC3036	•	•
36"x36"x12"	WBC3636	•	•
30"x42"x12"	WBC3042	•	•
36"x42"x12"	WBC3642	•	•

*Modifications available | right hinge cabinet shown
30" & 36" high cabinets have two shelves | 42" high cabinets have three shelves
Can be pulled up to 3" from wall

MICROWAVE

WALL CABINET

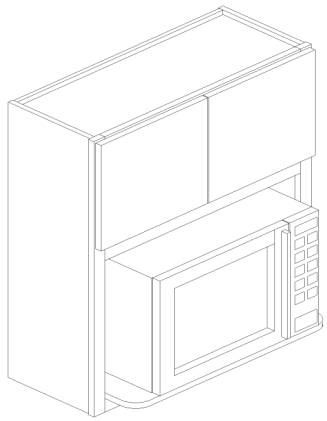

WxHxD	SKU	MINIMAL SERIES	ESSENTIAL SERIES
30"x30"x12"	WMO3030	•	•
30"x36"x12"	WMO3036	•	•
30"x42"x12"	WMO3042	•	•

*Modifications available | Comes standard with finished interior
Removable shelf is 17" deep, microwave opening is 27" wide by 16.5" high

GLASS DOOR

WALL CABINETS

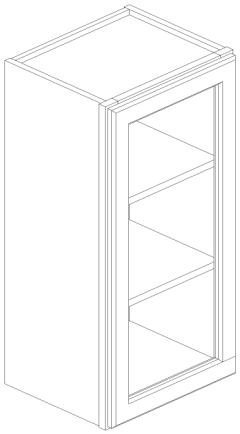

WxHxD	SKU	MINIMAL SERIES	ESSENTIAL SERIES
15"x30"x12"	W1530GD	•	•
15"x36"x12"	W1536GD	•	•
15"x42"x12"	W1542GD	•	•
24"x30"x12"	W2430GD	•	•
24"x36"x12"	W2436GD	•	•
24"x42"x12"	W2442GD	•	•
30"x30"x12"	W3030GD	•	•
30"x36"x12"	W3036GD	•	•
30"x42"x12"	W3042GD	•	•

*Modifications available | Glass not included, interior finished upon request
30" & 36" high cabinets have two shelves | 42" high cabinets have three shelves

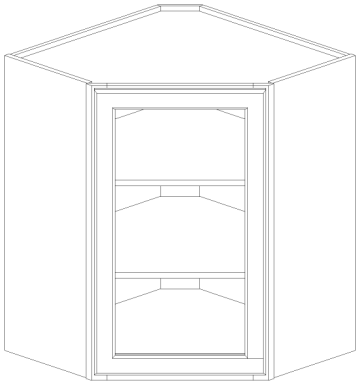

WxHxD	SKU	MINIMAL SERIES	ESSENTIAL SERIES
24"x30"x12"	WDC2430GD	•	•
24"x36"x12"	WDC2436GD	•	•
24"x42"x12"	WDC2442GD	•	•
27"x36"x15"	WDC273615GD	•	•
27"x42"x15"	WDC274215GD	•	•

*Modifications available | Glass not included, interior finished upon request
30" & 36" high cabinets have two shelves | 42" high cabinets have three shelves

SINGLE GLASS DOOR

WALL GLASS CABINET

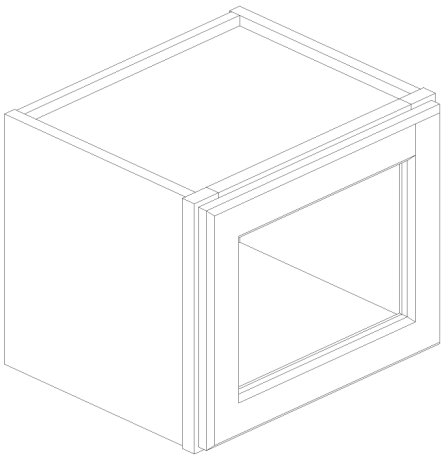

WxHxD	SKU	MINIMAL SERIES	ESSENTIAL SERIES
12"x12"	W1212GD	•	•
15"x12"	W1512GD	•	•
18"x12"	W1812GD	•	•
21"x12"	W2112GD	•	•

*Modifications available | Glass not included, interior finished upon request
Only available in LSW, LSE, LSG, AA, AB, AO

DOUBLE GLASS DOOR

WALL GLASS CABINET

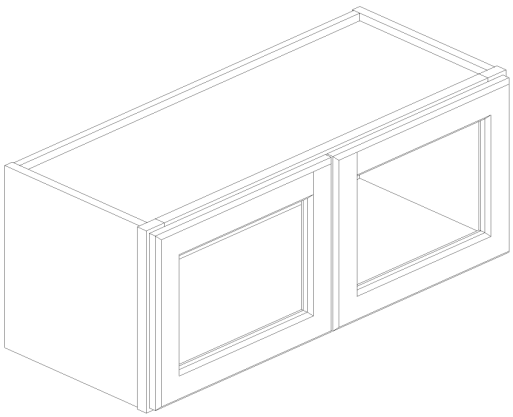

WxHxD	SKU	MINIMAL SERIES	ESSENTIAL SERIES
12"x12"	W2412GD	•	•
27"x12"	W2712GD	•	•
30"x12"	W3012GD	•	•
33"x12"	W3312GD	•	•
36"x12"	W3612GD	•	•

*Modifications available | Glass not included, interior finished upon request
Only available in LSW, LSE, LSG, AA, AB, AO

DIAGONAL GLASS DOOR

WALL GLASS CABINET

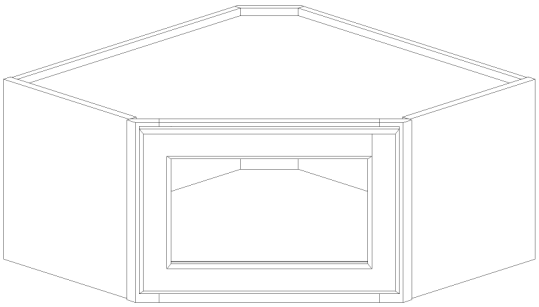

WxHxD	SKU	MINIMAL SERIES	ESSENTIAL SERIES
24"x12"x12"	WDC2412GD	•	•

*Modifications available | Glass not included, interior finished up request
Only available in LSW, LSE, LSG, AA, AB, AO

PRO TIP

Can't find the glass door size you are looking for? We can prep most doors for glass.
See the modification list on page 69.

WINE

WALL CABINETS

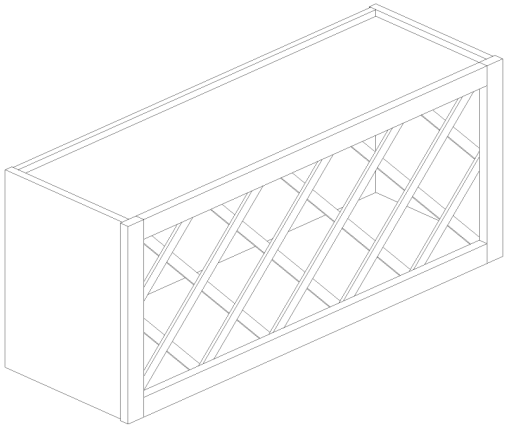

WINE RACK

WxHxD	SKU	MINIMAL SERIES	ESSENTIAL SERIES
30"x15"x12"	WR3015	•	•
36"x15"x12"	WR3615	•	•

*Comes standard with finished interior

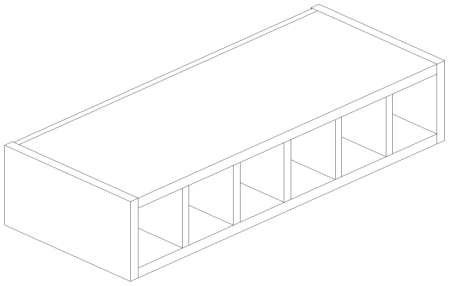

SLOTTED CUBBIE

WxHxD	SKU	MINIMAL SERIES	ESSENTIAL SERIES
30"x6"x12"	WCW630	•	•

*Comes standard with finished interior

WINE

WALL CABINETS

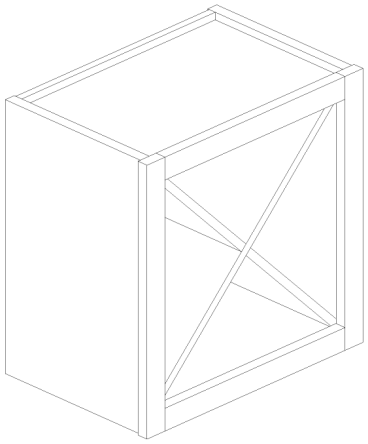

X STORAGE

WxHxD	SKU	MINIMAL SERIES	ESSENTIAL SERIES
18"x18"x12"	WCX1818	•	•

*Comes standard with finished interior

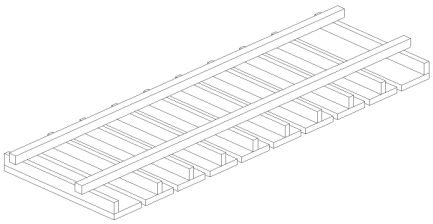

STEM GLASS HOLDER

WxHxD	SKU	MINIMAL SERIES	ESSENTIAL SERIES
30"x1.5"x12"	SGH30	•	•
36"x1.5"x12"	SGH36	•	•



BASE CABINET DESIGN AND SPECIFICATIONS

BASE CABINET SPECIFICATIONS

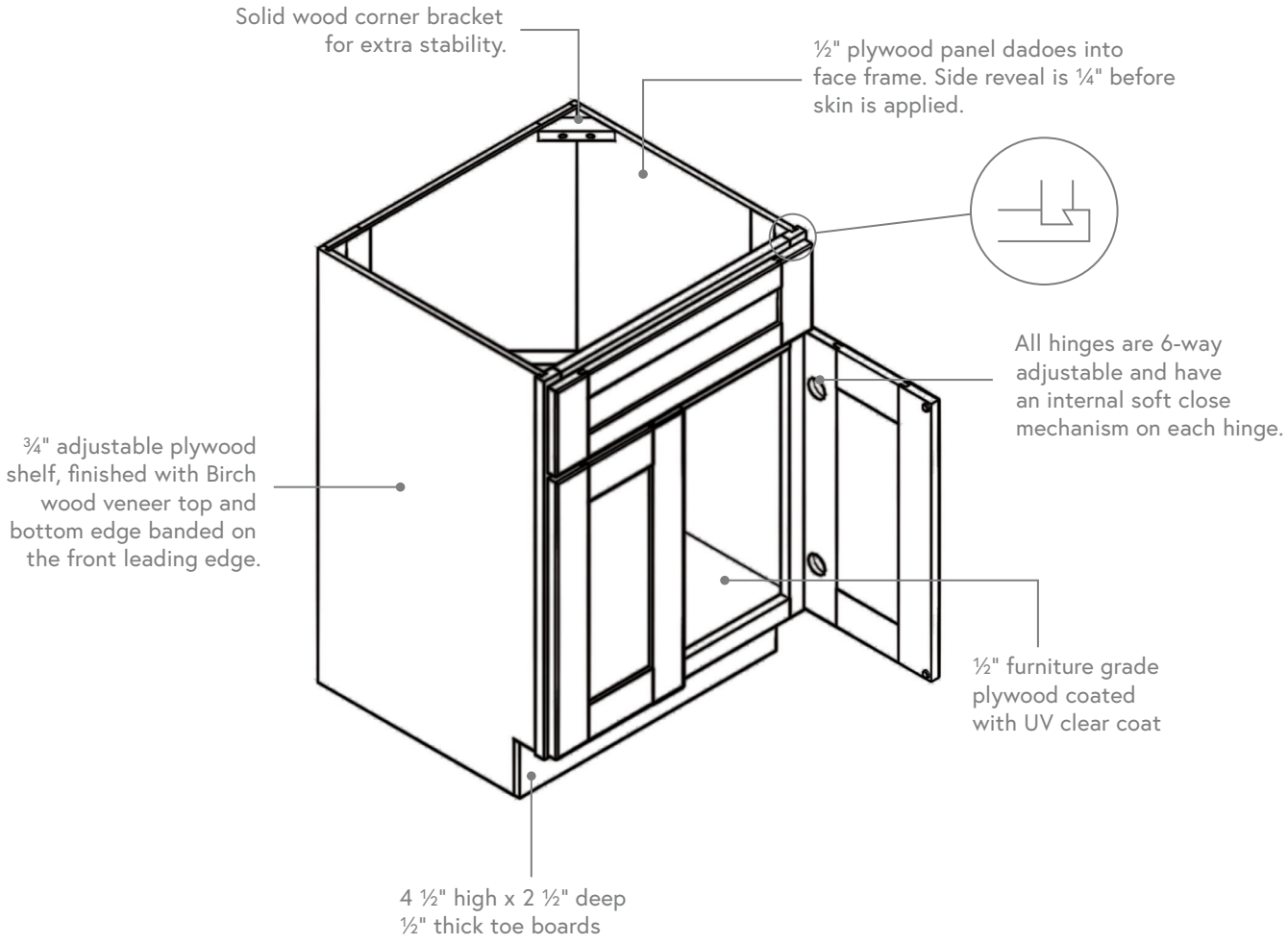

BASE WITH DRAWER

BASE CABINETS

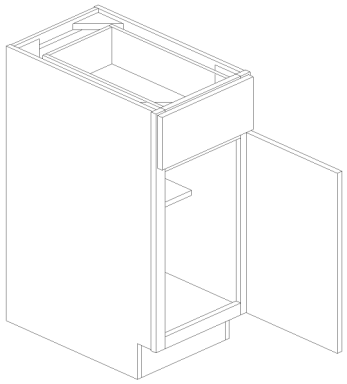

SINGLE DOOR

WxHxD	SKU	MINIMAL SERIES	ESSENTIAL SERIES
12"x34.5"x24"	B12	•	•
15"x34.5"x24"	B15	•	•
18"x34.5"x24"	B18	•	•
21"x34.5"x24"	B21	•	•

*Modifications available

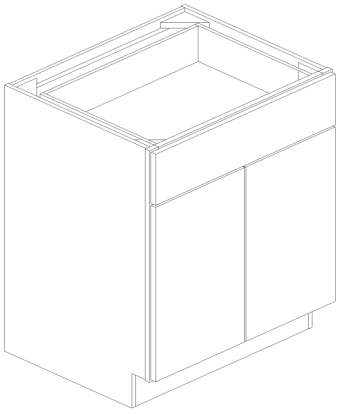

SINGLE DOOR

WxHxD	SKU	MINIMAL SERIES	ESSENTIAL SERIES
24"x34.5"x24"	B24	•	•
27"x34.5"x24"	B27	•	•
30"x34.5"x24"	B30	•	•
33"x34.5"x24"	B33	•	•
36"x34.5"x24"	B36	•	•

*Modifications available

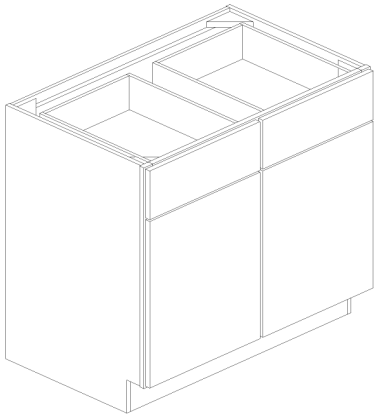

DOUBLE DOOR

WxHxD	SKU	MINIMAL SERIES	ESSENTIAL SERIES
39"x34.5"x24"	B39	•	•
42"x34.5"x24"	B42	•	•

*Modifications available

FULL HEIGHT

BASE CABINETS

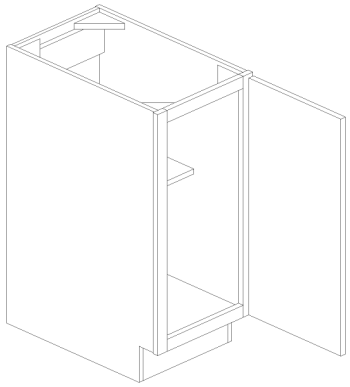

SINGLE DOOR

WxHxD	SKU	MINIMAL SERIES	ESSENTIAL SERIES
9"x34.5"x24"	B09FH	•	•
12"x34.5"x24"	B12FH	•	•
15"x34.5"x24"	B15FH	•	•
18"x34.5"x24"	B18FH	•	•
21"x34.5"x24"	B21FH	•	•

*Modifications available

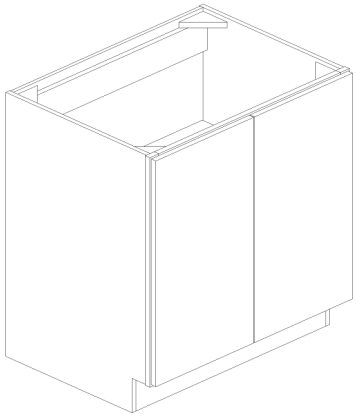

DOUBLE DOOR

WxHxD	SKU	MINIMAL SERIES	ESSENTIAL SERIES
24"x34.5"x24"	B24FH	•	•
27"x34.5"x24"	B27FH	•	•
30"x34.5"x24"	B30FH	•	•
33"x34.5"x24"	B33FH	•	•
36"x34.5"x24"	B36FH	•	•
39"x34.5"x24"	B39FH	•	•
42x34.5"x24"	B42FH	•	•

*Modifications available

DRAWER

BASE CABINETS

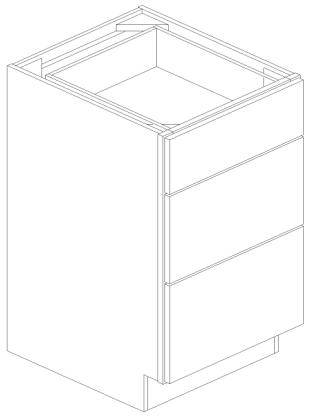

THREE DRAWER

WxHxD	SKU	MINIMAL SERIES	ESSENTIAL SERIES
12"x34.5"x24"	3DB12	•	•
15"x34.5"x24"	3DB15	•	•
18"x34.5"x24"	3DB18	•	•
21"x34.5"x24"	3DB21	•	•
24"x34.5"x24"	3DB24	•	•
30"x34.5"x24"	3DB30	•	•
36"x34.5"x24"	3DB36	•	•

*Modifications available

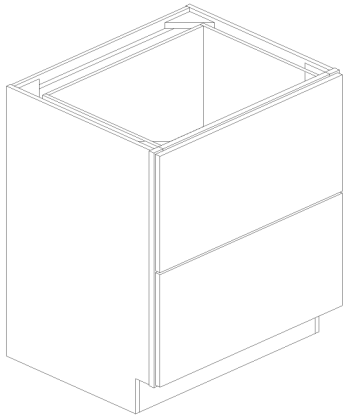

TWO DRAWER

WxHxD	SKU	MINIMAL SERIES	ESSENTIAL SERIES
30"x34.5"x24"	2DB30	•	•
36"x34.5"x24"	2DB36	•	•

*Modifications available

SINK

BASE CABINETS

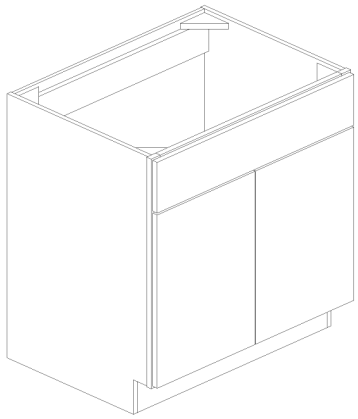

DOUBLE DOOR
SINGLE DRAWER

WxHxD	SKU	MINIMAL SERIES	ESSENTIAL SERIES
24"x34.5"x24"	SB24	•	•
30"x34.5"x24"	SB30	•	•
33"x34.5"x24"	SB33	•	•
36"x34.5"x24"	SB36	•	•

*Modifications available

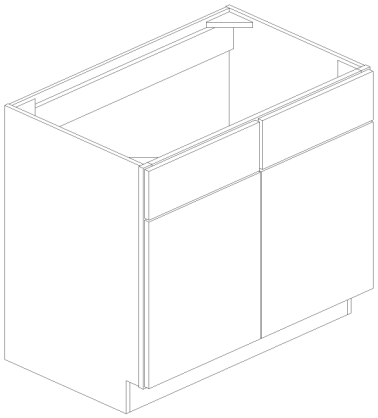

DOUBLE DOOR
DOUBLE DRAWER

WxHxD	SKU	MINIMAL SERIES	ESSENTIAL SERIES
39"x34.5"x24"	SB39	•	•
42"x34.5"x24"	SB42	•	•

*Modifications available

SINK

BASE CABINETS

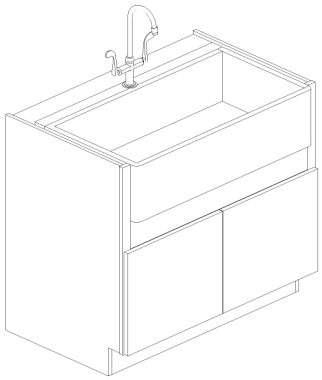

FARM SINK

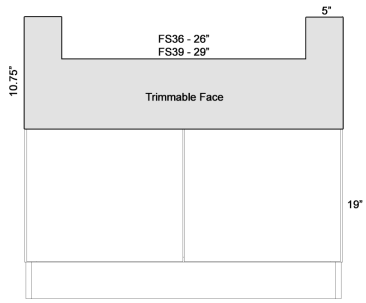

WxHxD	SKU	MINIMAL SERIES	ESSENTIAL SERIES
36"x34.5"x24"	FS36	•	•
39"x34.5"x24"	FS39	•	•

*Modifications available | sink opening must be cut in field

PRO TIP

Use a sharp blade and go slow when cutting farm sink opening to avoid excessive vibration that can cause joint splits. Order item SC–Scribe Molding to cover gaps where frame meets sink.

CORNER

BASE CABINETS

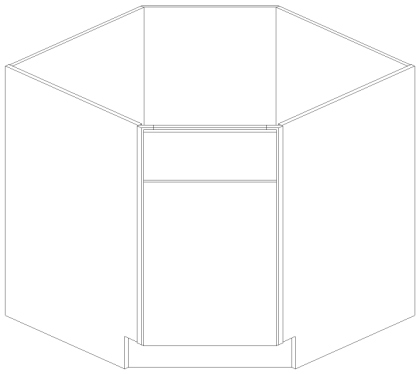

DIAGONAL
SINK

WxHxD	SKU	MINIMAL SERIES	ESSENTIAL SERIES
36"x34.5"x24"	DSB36	•	•

*Modifications available

CORNER

BASE CABINETS

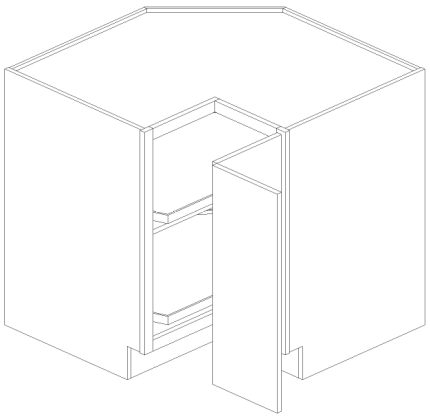

LAZY SUSAN

WxHxD	SKU	MINIMAL SERIES	ESSENTIAL SERIES
33"x34.5"x24"	LSB33	•	•
36"x34.5"x24"	LSB36	•	•

*Modifications available

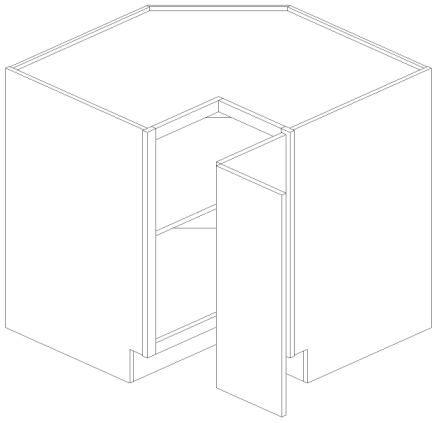

SQUARE CORNER

WxHxD	SKU	MINIMAL SERIES	ESSENTIAL SERIES
36"x34.5"x24"	BER36	•	•

*Modifications available

ANGLE END

BASE CABINETS

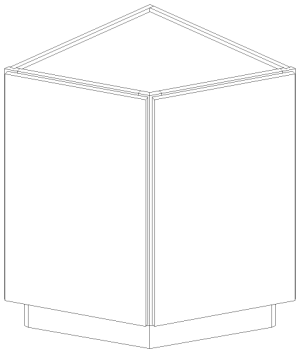

WxHxD	SKU	MINIMAL SERIES	ESSENTIAL SERIES
24"x34.5"x24"	BAE24	•	•

*Modifications available

BLIND

BASE CABINETS

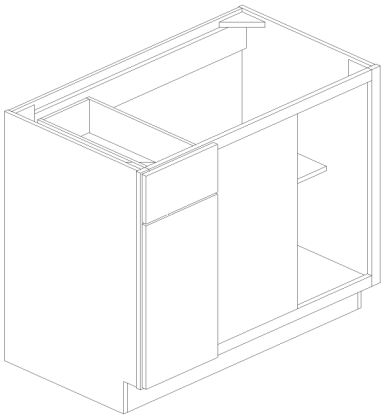

WxHxD	SKU	MINIMAL SERIES	ESSENTIAL SERIES
39"x42"x24"	BLB39/42	•	•
42"x45"x24"	BLB42/45	•	•

*Modifications available | right hinge cabinet shown
Can be pulled up to 3" from wall

TECHNICAL SPECS

BLB39/42
Door Opening 8.5"
Center Stile 19"
Blind Opening 8.5"

BLB42/45
Door Opening 11.5"
Center Stile 16"
Blind Opening 11.5"

MICROWAVE

BASE CABINETS

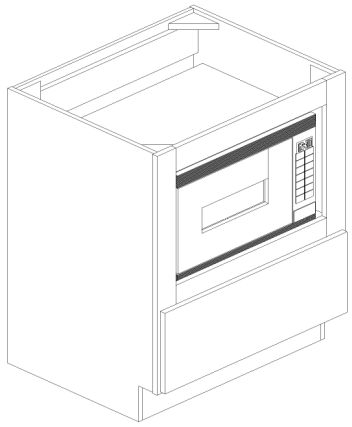

WxHxD	SKU	MINIMAL SERIES	ESSENTIAL SERIES
30"x34.5"x24"	BMD30	•	•

*Modifications available | Comes standard with finished interior

TECHNICAL SPECS

BMD30
Microwave opening 24" wide x 13.25" high
3" Stiles & Rails surrounding microwave opening
Fixed shelf above drawer

PRO TIP

Check your microwave specs before ordering. Some microwave trim kits fit without modification to face frame. You may have to order item TF396–Tall Filler to trim around your microwave. All cutting and modifications are done in the field.

SPECIALTY

BASE CABINETS

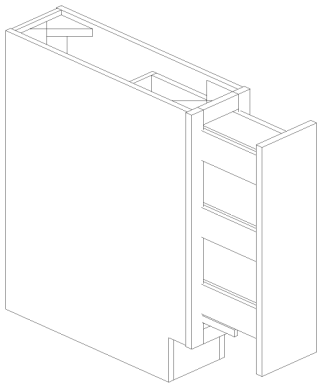

SPICE RACK

WxHxD	SKU	MINIMAL SERIES	ESSENTIAL SERIES
9"x34.5"x24"	B09SP	•	•

*Modifications available | Does not come with soft close mechanism

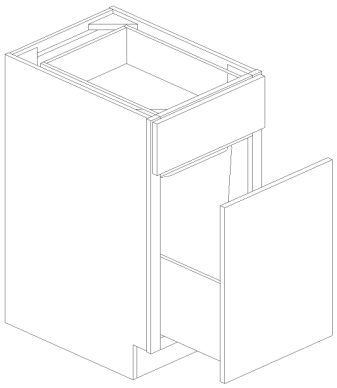

WASTE BASKET

WxHxD	SKU	MINIMAL SERIES	ESSENTIAL SERIES
18"x34.5"x24"	BWB18	•	•

*Modifications available | Does not come with soft close mechanism
Waste baskets sold separately, holds two waste baskets

SPECIALTY

BASE CABINETS

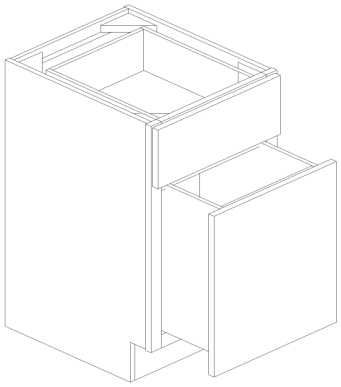

FILE DRAWER

WxHxD	SKU	MINIMAL SERIES	ESSENTIAL SERIES
18"x30"x21"	FDB18	•	•

*File hanging system not included

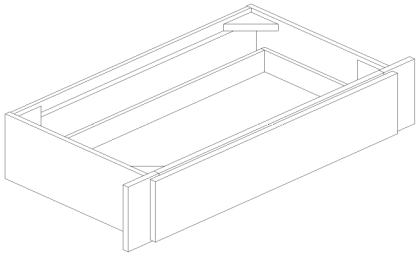

VANITY KNEE DRAWER

WxHxD	SKU	MINIMAL SERIES	ESSENTIAL SERIES
30/36"x7"x21"	KD30/36	•	•

*Overall size is 36" wide 3" Tabs can be cut to size
Actual drawer face is 30"



TALL CABINET DESIGN AND SPECIFICATIONS

TALL CABINETS SPECIFICATIONS

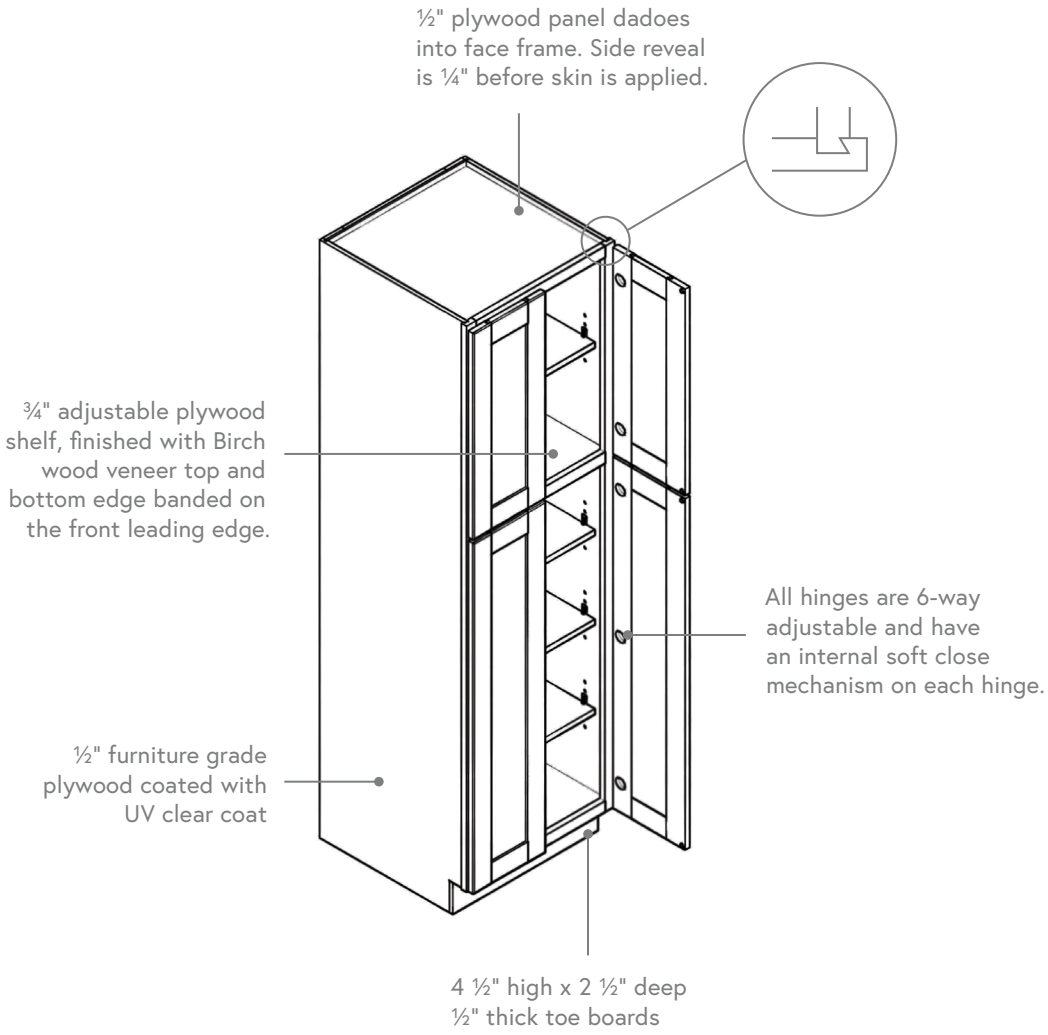

PANTRY

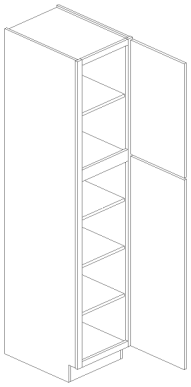

SINGLE DOOR

WxHxD	SKU	MINIMAL SERIES	ESSENTIAL SERIES
18"x84"x24"	TP188424	•	•
18"x90"x24"	TP189024	•	•
18"x96"x24"	TP189624	•	•

*Modifications available
84" high & 90" high cabinets have four shelves | 96" high cabinets have 5 shelves

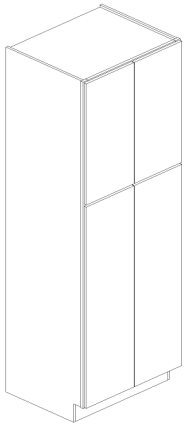

DOUBLE DOOR

WxHxD	SKU	MINIMAL SERIES	ESSENTIAL SERIES
24"x84"x24"	TP248424	•	•
24"x90"x24"	TP249024	•	•
24"x96"x24"	TP249624	•	•
30"x84"x24"	TP308424	•	•
30"x90"x24"	TP309024	•	•
30"x96"x24"	TP309624	•	•

*Modifications available
84" high & 90" high cabinets have four shelves | 96" high cabinets have 5 shelves

OVEN

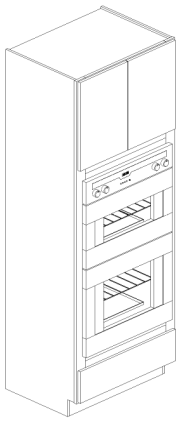

WxHxD	SKU	MINIMAL SERIES	ESSENTIAL SERIES
33"x84"x24"	OC338424	•	•
33"x90"x24"	OC339024	•	•
33"x96"x24"	OC339624	•	•

*Modifications available

TECHNICAL SPECS

Oven opening 29" wide x 49" high
All cuts are done in field
Not designed for single ovens or oven/ microwave combinations

PRO TIP

Check your appliance dimensions before ordering. You may need to order additional items (TF396–Tall Fillers and Item SC–Scribe Molding) to trim out oven in the opening. ProCraft is not responsible for assuring your appliance will fit in this cabinet.

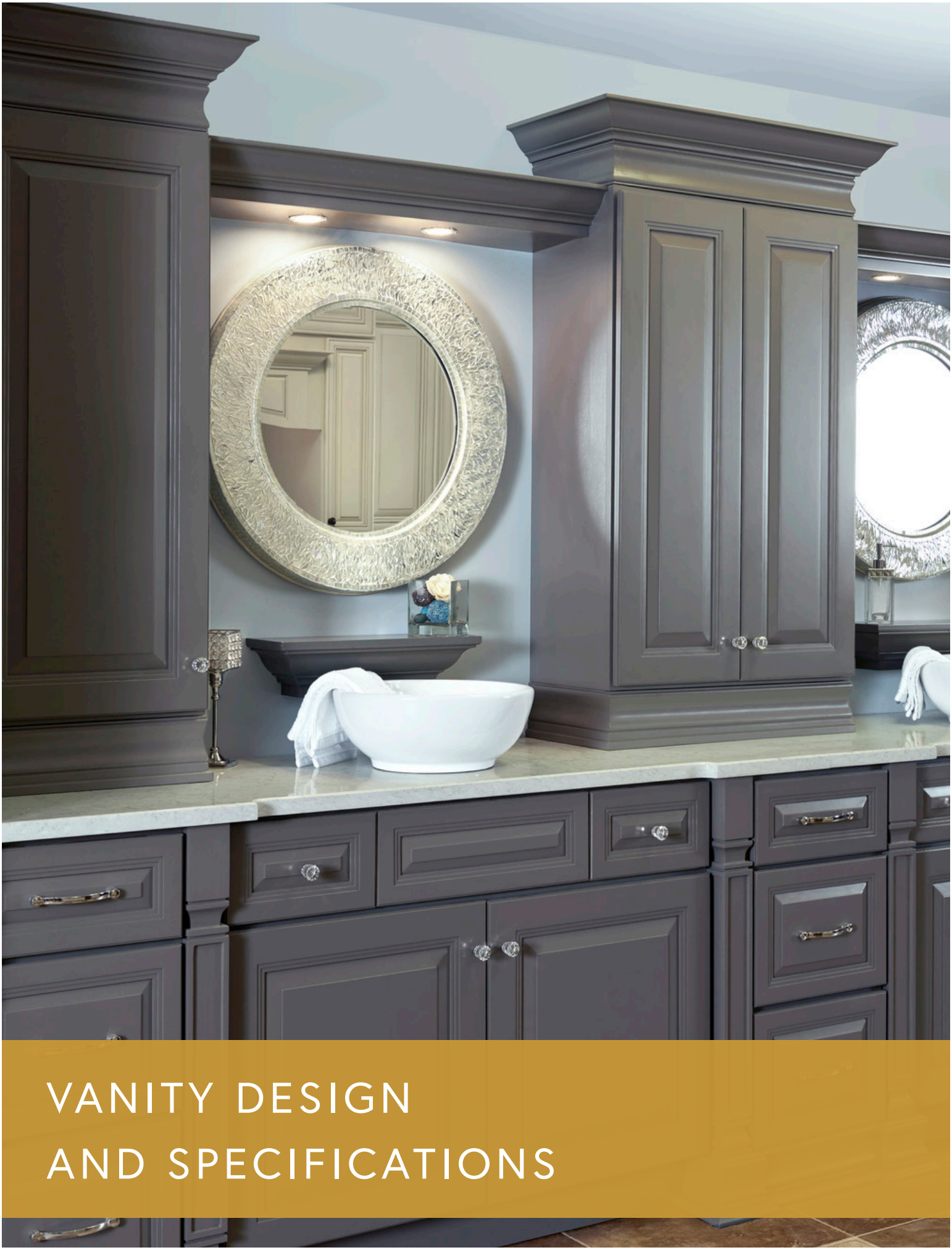

VANITY DESIGN AND SPECIFICATIONS

VANITY CABINETS SPECIFICATIONS

⅝" solid wood dovetail construction on all sides of drawer box with UV clear coat on all exposed surfaces. Drawer glides are all steel construction soft close mechanism.

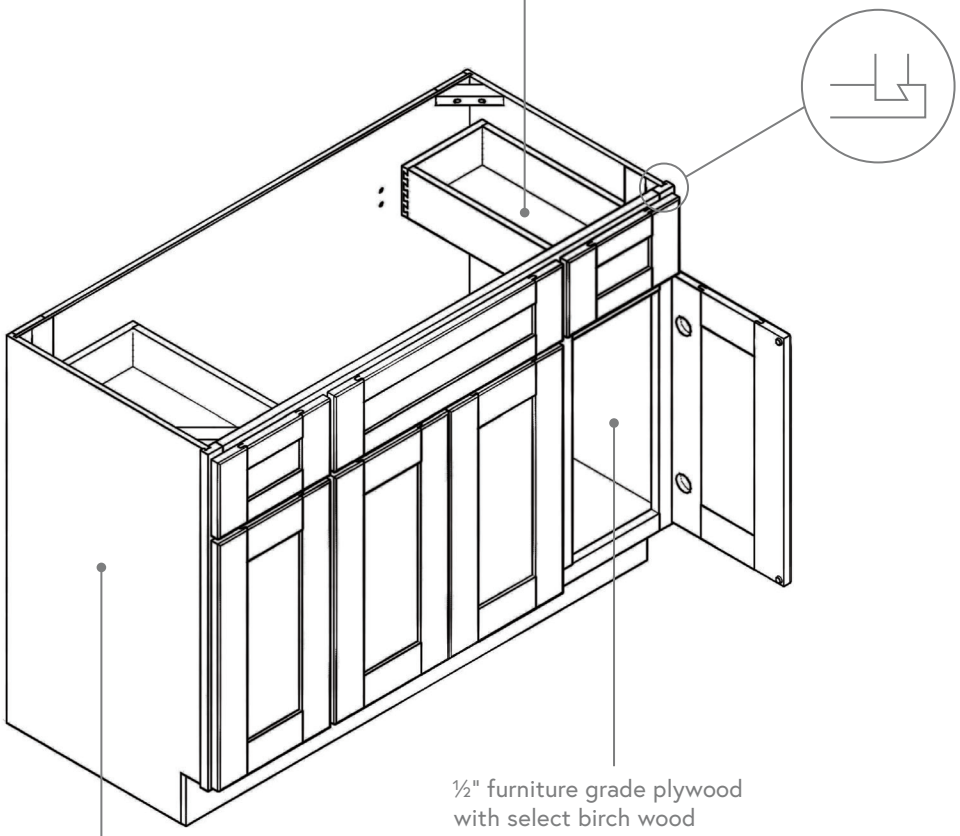

½" furniture grade plywood with select birch wood veneer on both the interior and exterior, which is used for the top, bottom, and sides.

1 ½" solid wood face frame with a unique semi-dovetail joinery that locks the side panel with the face frame. All other joinery is via dadoes which interlock the components. All assembly is by pin and glue.

BASE WITH DRAWER

VANITY CABINETS

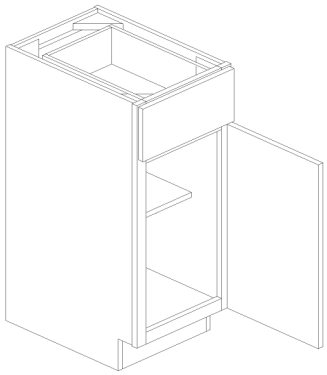

WxHxD	SKU	MINIMAL SERIES	ESSENTIAL SERIES
12"x34.5"x21"	VB12	•	•
15"x34.5"x21"	VB15	•	•

*Modifications available

DRAWER

VANITY CABINETS

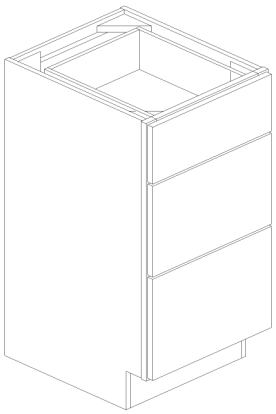

WxHxD	SKU	MINIMAL SERIES	ESSENTIAL SERIES
12"x34.5"x21"	VDB12	•	•
15"x34.5"x21"	VDB15	•	•
18"x34.5"x21"	VDB18	•	•
24"x34.5"x21"	VDB24	•	•

*Modifications available

PRO TIP

Looking for a 21" or 30" wide vanity drawer bank? Take a 3DB21 OR 3DB30 and apply a reduce depth drawer charge (RDD) to get a 21" deep cabinet.

SINK

VANITY CABINETS

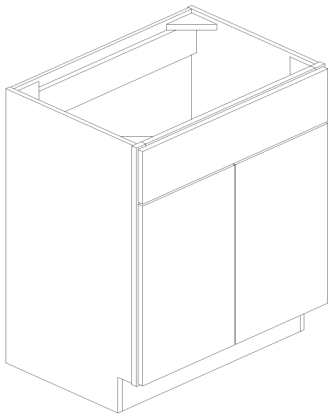

WxHxD	SKU	MINIMAL SERIES	ESSENTIAL SERIES
24"x34.5"x21"	VSB24	•	•
30"x34.5"x21"	VSB30	•	•
36"x34.5"x21"	VSB36	•	•

*Modifications available

SINK DRAWERS

VANITY CABINETS

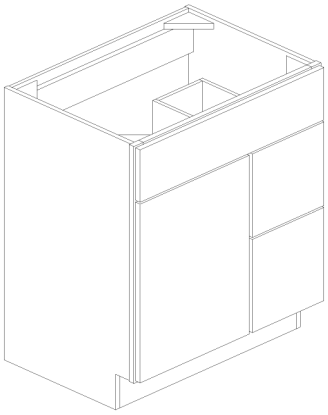

WxHxD	SKU	MINIMAL SERIES	ESSENTIAL SERIES
30"x34.5"x21"	VSD30L	•	•
30"x34.5"x21"	VSD30R	•	•
36"x34.5"x21"	VSD36L	•	•
36"x34.5"x21"	VSD36R	•	•

*Modifications available | Right cabinet shown

VANITY

CONSOLES

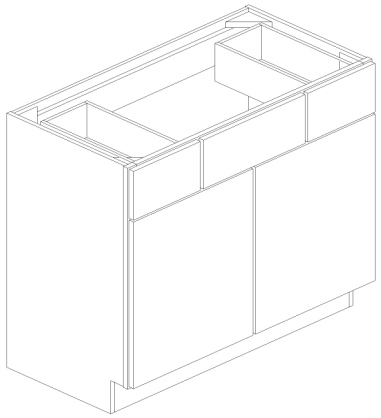

WxHxD	SKU	MINIMAL SERIES	ESSENTIAL SERIES
42"x34.5"x21"	VSD42	•	•

*Modifications available

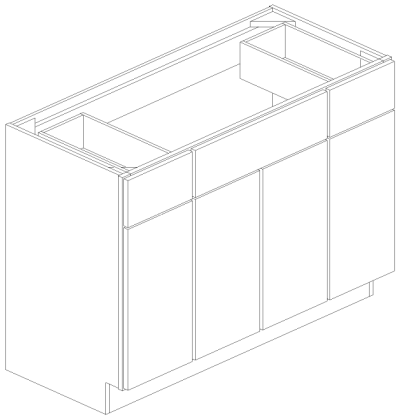

WxHxD	SKU	MINIMAL SERIES	ESSENTIAL SERIES
48"x34.5"x21"	VSD48	•	•

*Modifications available

ACCESSORIES

It's important to remember that the final embellishments can really bring a beautiful design together. Our accessories help put the final touches on your product selection.



CHIMNEY HOOD

ACCESSORIES

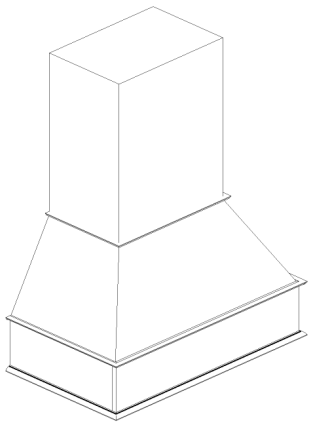

WxHxD	SKU	MINIMAL SERIES	ESSENTIAL SERIES
34.5"x53"x24"	CH36	•	•
40.5"x53"x24"	CH42	•	•

*Ships in two boxes | Chimney section is 30" high by 22" wide
Interior dimensions: CH36: 30.75" x 21.5" x 8" | CH42: 36.75" x 21.5" x 8"

ARCHED

HOOD

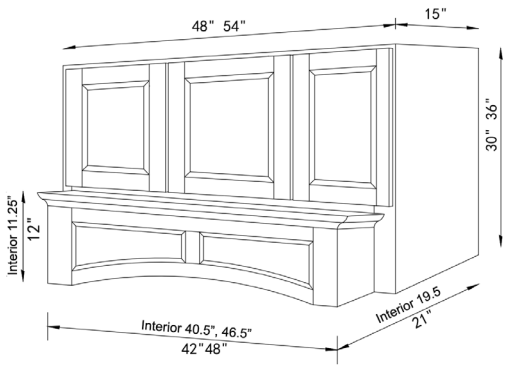

WxHxD	SKU	MINIMAL SERIES	ESSENTIAL SERIES
48"x30"x24"	RHA4830	•	•
48"x36"x24"	RHA4836	•	•
54"x30"x24"	RHA5430	•	•
54"x36"x24"	RHA5436	•	•

*Only available in LSW, AA, AO, BG, and AB

SPICE RACK

HOOD

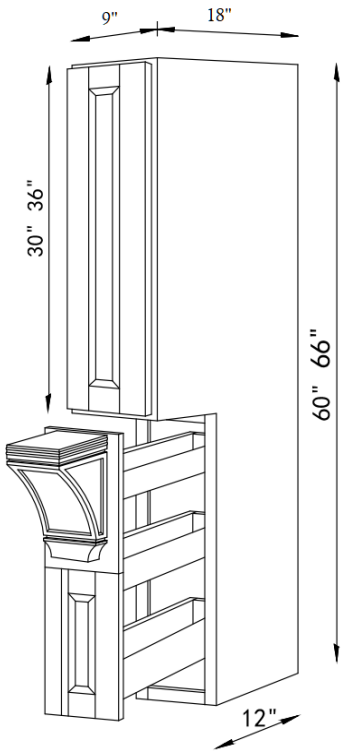

WxHxD	SKU	MINIMAL SERIES	ESSENTIAL SERIES
9"x60"x18"	HSR0960	•	•
9"x66"x18"	HSR0966	•	•

*Only available in LSW, AA, AO, BG, and AB

CROWN

MOLDING

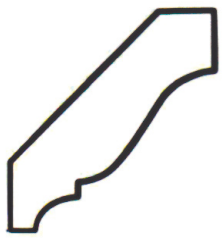

WxHxD	SKU	MINIMAL SERIES	ESSENTIAL SERIES
96"x3"x3"	CM-4	•	•

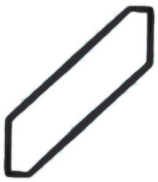

WxHxD	SKU	MINIMAL SERIES	ESSENTIAL SERIES
96"x3.5"x3.5"	CMM-4	•	

*Only available in LSW, LSE, and LSG

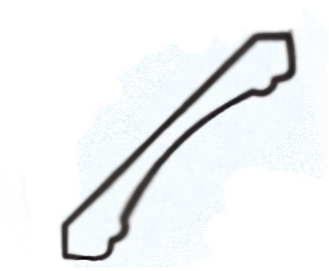

WxHxD	SKU	MINIMAL SERIES	ESSENTIAL SERIES
96"x3.5"x3.5"	FCM		•

*Only available in AA, AB, BG, ESC, NME, and LSG

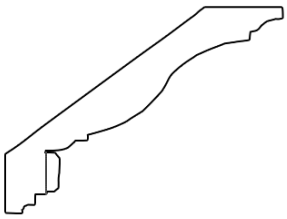

WxHxD	SKU	MINIMAL SERIES	ESSENTIAL SERIES
96"x3.5"x3.5"	DCM		•

*Only available in AO and SCN

BASE

MOLDINGS



WxHxD	SKU	MINIMAL SERIES	ESSENTIAL SERIES
96"x4.5"x.75"	FBM8	•	•

FILLERS

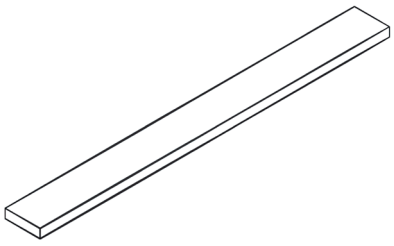

WxHxD	SKU	MINIMAL SERIES	ESSENTIAL SERIES
Wall Filler			
3"x30".75"	WF330	•	•
3"x36".75"	WF336	•	•
3"x42".75"	WF342	•	•
6"x30".75"	WF630	•	•
6"x36".75"	WF636	•	•
6"x42".75"	WF642	•	•
Tall Filler			
3"x96".75"	TF396	•	•
6"x96".75"	TF696	•	•

FLUTED

FILLERS

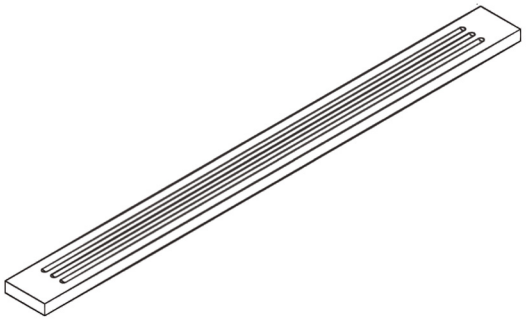

WxHxD	SKU	MINIMAL SERIES	ESSENTIAL SERIES
3"x30".75"	FF330	•	•
3"x36".75"	FF336	•	•
3"x42".75"	FF342	•	•
3"x96".75"	FF396	•	•

TOE KICK

FILLERS

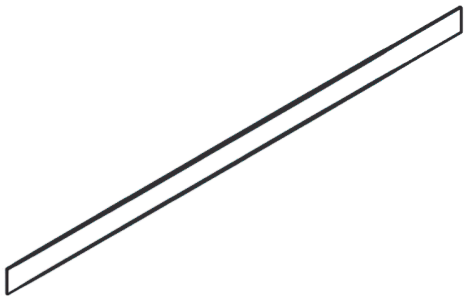

WxHxD	SKU	MINIMAL SERIES	ESSENTIAL SERIES
96"x4.5".25"	TK96	•	•

PRO TIP

Try using an OCL–Outside Corner Molding to finish cut or exposed edges of toe kick for a clean, finished look.

LIGHT RAIL MOLDING

TRIMS

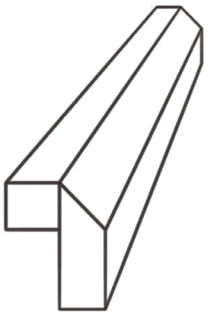

WxHxD	SKU	MINIMAL SERIES	ESSENTIAL SERIES
96"x2"x1.5"	LBMF	•	•

LIGHT VALANCE PROFILE

TRIMS

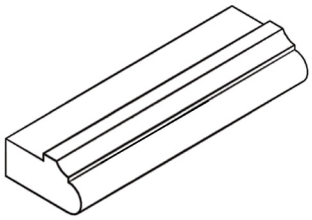

WxHxD	SKU	MINIMAL SERIES	ESSENTIAL SERIES
96"x.75"x1.5"	LVP	•	•

LIGHT VALANCE BEADED

TRIMS

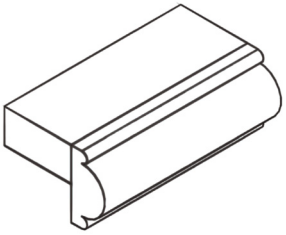

WxHxD	SKU	MINIMAL SERIES	ESSENTIAL SERIES
96"x1.5"x1.5"	LVB	•	•

CHAIR RAIL

TRIMS

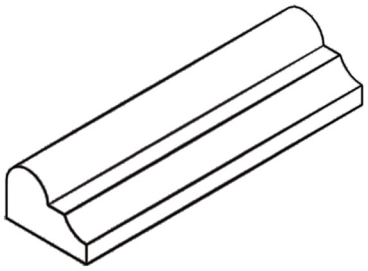

WxHxD	SKU	MINIMAL SERIES	ESSENTIAL SERIES
96"x1.5"x1.5"	CR	•	•

FURNITURE STRAIGHT

TRIMS

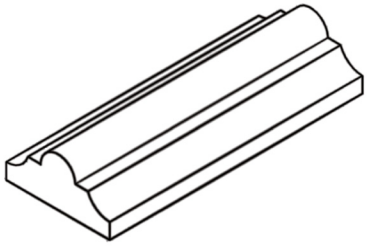

WxHxD	SKU	MINIMAL SERIES	ESSENTIAL SERIES
96"x.75"x1.6"	FSM	•	•

SCRIBE

TRIMS

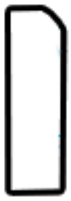

WxHxD	SKU	MINIMAL SERIES	ESSENTIAL SERIES
96"x.75"x.25"	SC	•	•

BATTEN

TRIMS



WxHxD	SKU	MINIMAL SERIES	ESSENTIAL SERIES
96"x.75"x.25"	BAM	•	•

OUTSIDE CORNER

TRIMS



WxHxD	SKU	MINIMAL SERIES	ESSENTIAL SERIES
96"x.75"x.75"	OCL	•	•

QUARTER ROUND

TRIMS

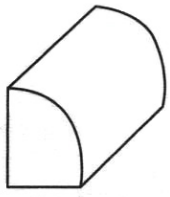

WxHxD	SKU	MINIMAL SERIES	ESSENTIAL SERIES
96"x.75"x.75"	QR	•	•

ARCHED PANEL

VALANCES

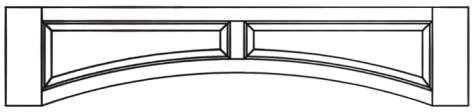

WxHxD	SKU	MINIMAL SERIES	ESSENTIAL SERIES
36"x9"x.75"	AVAL36	•	•
48"x9"x.75"	AVAL48	•	•

*Can cut up to 2" off either side

BEADED

VALANCES



WxHxD	SKU	MINIMAL SERIES	ESSENTIAL SERIES
42"x6"x.75"	GBVAL42	•	•
60"x6"x.75"	GBVAL60	•	•

*Can cut up to 7.5" off either side

CORBEL

STRUCTURAL

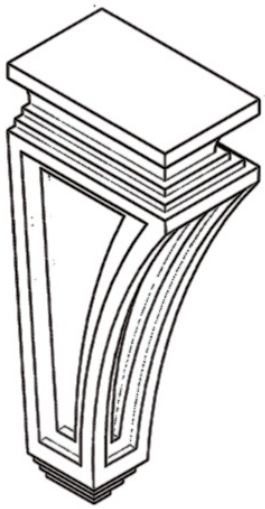

WxHxD	SKU	MINIMAL SERIES	ESSENTIAL SERIES
3"x12"x5"	CSS	•	•

POST

STRUCTURAL

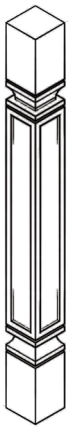

WxHxD	SKU	MINIMAL SERIES	ESSENTIAL SERIES
3"x34.5"x3"	SP34.5	•	•
3"x42"x3"	SP42	•	•

DECORATIVE

END PANEL

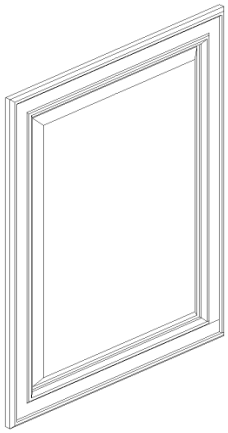

WxHxD	SKU	MINIMAL SERIES	ESSENTIAL SERIES
12"x30"x.75"	WDD1230	•	•
12"x36"x.75"	WDD1236	•	•
12"x42"x.75"	WDD1242	•	•
23.5"x25.5"x.75"	BDD23.5x25.5	•	•
23.5"x30"x.75"	BDD23.5x30	•	•

ROLL OUT TRAY SET

ACCESSORIES

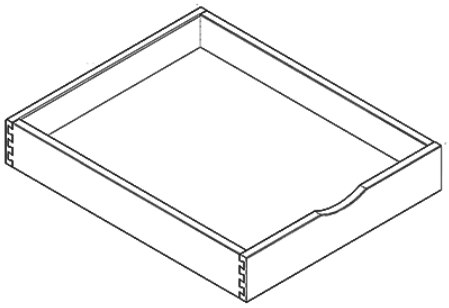

WxHxD	SKU	MINIMAL SERIES	ESSENTIAL SERIES
11"x4.25"x21"	ROT15	•	•
14"x4.25"x21"	ROT18	•	•
17"x4.25"x21"	ROT21	•	•
20"x4.25"x21"	ROT24	•	•
26"x4.25"x21"	ROT30	•	•
32"x4.25"x21"	ROT36	•	•

*Modifications available | Roll out ships loose

PRO TIP

When purchasing roll out trays, match the ROT# to the cabinet width. For example, B24 accepts ROT24.

END

PANELS

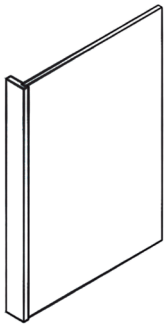

WxHxD	SKU	MINIMAL SERIES	ESSENTIAL SERIES
3"x34.5"x24"	BEP3	•	•
3"x96"x24"	REP396	•	•

*Finished on both sides

SIDE

FINISHED SKINS

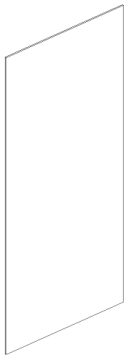

WxHxD	SKU	MINIMAL SERIES	ESSENTIAL SERIES
12"x30"x.25"	WS1230	•	•
12"x36"x.25"	WS1236	•	•
12"x42"x.25"	WS1242	•	•
24"x34.5"x.25"	BS24	•	•
24"x96"x.25"	TS2496	•	•

*Dimensions listed are nominal, actual size is slightly smaller to fit behind face frame.

PLYWOOD

PANELS

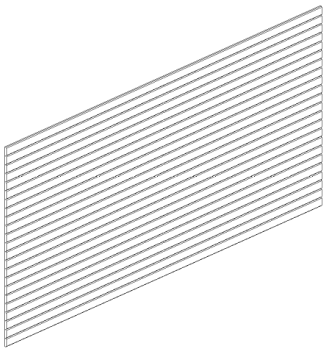

WxHxD	SKU	MINIMAL SERIES	ESSENTIAL SERIES
48"x96"x.25"	BP4896.25	•	•
Edge Banded Panels			
48"x96"x.75"	BP4896.75	•	•
24"x96"x.75"	BP2496.75	•	•
Beaded			
48"x96"x.25"	BBP4896.25	•	•

*¾ panels are edge banded 4 sides

WALL

SHELF UNIT

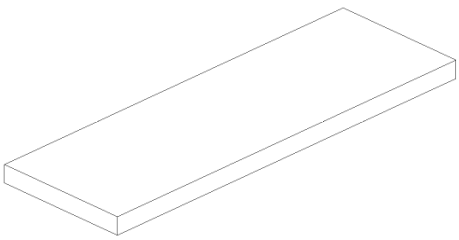

WxHxD	SKU	MINIMAL SERIES	ESSENTIAL SERIES
36"x12"x1.5"	WSF3612	•	•
48"x12"x1.5"	WSF4812	•	•

*Only available in LSW, LSE, LSG, AA, AO, BG, and AB

PRO TIP

If cutting a shelf in width, make sure to butt one side against a wall or cabinet to cover the raw edge. Also be mindful of the support locations.



ORDERING POLICIES

ORDERING POLICIES

PLACING YOUR ORDER

ProCraft Cabinetry accepts written orders only and may be submitted using the ordering form located in the back of this catalog. You may also send an email with a list of items as long as ProCraft's nomenclature is used.

ORDER PROCESSING

If you have any questions or concerns, every Dealer account has a dedicated Client Services Representative that your orders may be submitted to. Once an order has been submitted you will receive an order acknowledgment with an estimate for you to review. Estimates must be approved, in writing, before the order will be processed.

ORDER CHANGES

Change orders are not permitted once an order has been approved. Orders may be canceled up until the order has been picked from inventory. All canceled orders are subject to a 25% restocking fee. The change order must be submitted as a new order and will be placed at the beginning of the order processing que.

SHIPPING

Deliveries will incur additional charges which will be included separately on your estimate. When you are submitting your order, specify whether it will be a pickup or delivery order, along with the delivery location and address. Someone must be present at the time of delivery to receive and sign for the order. ProCraft schedules orders as they are received. Rush orders may incur additional charges.

SCHEDULE FOR SHIPPING

ProCraft schedules orders as they are received. Rush orders may incur additional charges. Shipping is not included in the price. A shipping price will be provided for you in addition to your order price.

RECEIVING POLICIES

CHECK YOUR ORDER

Someone must be present at the time of delivery to receive your order. It is your responsibility to inspect your order for any missing items or visible damage. Any missing items or damaged packaging must be notated on the BOL or delivery ticket before signing any paperwork from the driver. If the BOL is electronic, be sure to request the driver to allow you to add notes on the device before signing. Report any issues to your ProCraft Cabinetry Representative immediately with clear and visible photos of the damaged products and your copy of the Bill of Lading. ProCraft is not responsible for loss or damage that occurs during shipment after you give the carrier a clean receipt. All damages caused during delivery are not covered under warranty. Concealed damages must be reported within 48 hours of delivery.

MISSING ITEMS

If there are items missing from your order, ensure to get a copy of the Bill of Lading and clearly notate which components are missing.

DAMAGES

Please inspect all boxes for visible damage in the presence of the carrier representative. Report any issues to your ProCraft Cabinetry Representative immediately with clear and visible photos of the damaged products and your copy of the Bill of Lading. ProCraft is not responsible for loss or damage that occurs during shipment after you give the carrier a clean receipt. All damages caused during delivery are not covered under warranty.

WARRANTY & DISCLAIMER

ProCraft Cabinetry **("We" or "Us")** warrants to the first Residential Purchaser **("You" or "Your")** a Five-Year Limited Warranty that warrants any product manufactured by Us and sold only in the United States to be free from any unnatural or unavoidable defects, under normal residential usage, which cannot be satisfactorily abated by You. This warranty is effective for cabinetry purchases on or after January 1st, 2019.

Who is a Residential Purchaser? Under this limited warranty, a **"Residential Purchaser"** means any of the following:

- A person who purchases Product and is installed in a dwelling that is owned and used as a primary or secondary home.
- A person or business (Builder/Contractor/Developer) that purchases product and is installed in a dwelling by that person or business on behalf of the Owner of the dwelling. In such case, this Limited Warranty may be transferred to the Owner of the dwelling if used as a primary or secondary home by Owner.

What the Limited Warranty Covers

We may elect to repair, replace and/or modify, at our option, any component(s) which has/have been proven to be defective and unable to serve its/their intended purpose (under normal installation, condition and use) by Us. The following parts are covered by this warranty:

Door Frames, Door Fronts, Cabinet Shelves, Roll Out Trays, Base End Panels, Cabinet Doors, Drawer Glides, Shelving Clips, Cabinet Accessories (toe kick, molding, etc.), Cabinet Boxes

What the Limited Warranty Does Not Cover

- Deterioration/discoloration due to normal use
- Natural color variations in stained cabinetry
- Replacement of cabinetry or cabinetry parts that have been used for purposes outdoors
- Replacement of cabinetry or cabinetry parts that have been altered or modified from their original purpose, misused, neglected and/or not well-maintained
- Damage during transit
- Storage procedures that exceed the guidelines We recommend

WARRANTY & DISCLAIMER

- Labor costs associated with warranty claim (installation and/or removal)
- Transportation and/or installation of defective, repaired and/or replacement product(s)
- Service calls to retrieve the defective product(s) from You to Us.
- Damage by causes outside of our control (flood, fire, or other acts of God)
- Cabinets installed in areas that are outside the recommended storage temperatures (50-85^{0}F)

DISCLAIMER

Wooden cabinets will expand and contract due to environmental conditions outside of our control, such as humidity. If a door appears warped less than ¼ inch, You agree to let it hang in its original position for one season before a claim is made. This will allow for the proper cabinet setting to take place as it can vary depending on the environment the cabinetry is located in.

HOW TO FILE A WARRANTY CLAIM

To initiate a claim, please contact the ProCraft location that supplied you with Your original order. Please have the original invoice number with you at the time you make a claim. All warranty claims are subject to inspection by Us. You understand that replacement parts may vary in their natural color variation from those which were originally supplied to You.

IMPLIED WARRANTY

This Limited Warranty serves as the sole warranty for ProCraft in lieu of any and all other warranties both oral and iimplied—including Warranty of Merchantability and Fitness for a Particular Use.

REPLACEMENTS & RETURNS

DOCUMENT YOUR ITEMS

You need to receive any damaged components that arrive—do not reject any items. All concealed damaged items must be reported within forty-eight (48) hours after the product has been delivered. All claims should be reported tp your ProCraft Cabinetry location via your Representative by sending the order information regarding the issue and pictures showing the damage.

FILING A CLAIM

To file a claim, submit the claim form located in the back of this catalog along with pictures of the damage. All claims will need to be authorized by ProCraft prior to return shipment. Products that have incurred damage due to user error are replaced at the client's expense and will not be refunded under any circumstances.

RETURNS

Returns accepted on RTA cabinetry are subject to a 25% restocking fee of the order total. Boxes must be unopened, clean, and unmarked. Returns will be credited only upon return and inspection of product when it arrives back to ProCraft. Assembled/installed cabinetry is considered to be custom built and is therefore nonreturnable. We cannot accept returns on any pieces of trim (this includes all types of molding, toe kick and plywood panels). We will not process any returns if the product returned is missing or incomplete from the original shipment. Returns must be submitted within 30 days of delivery.

CARE & MAINTENANCE

BASIC CLEANING

For after installation cleaning and/or normal periodic cleaning of your new cabinets, use a soft, lint-free cotton cloth dampened with warm water. If needed, you can use a mild dishwashing detergent or soap on your damp soft cloth. When doing your initial cleaning, remove as much dust and construction dirt as possible. Immediately remove any spills or splatters of any food or liquid from the surface of your cabinets. Be sure to wipe cabinets dry after cleaning and do not allow water to remain on cabinets for extended periods of time.

BASIC MAINTENANCE

After normal cabinet use, your cabinet doors may need some adjusting. This can be accomplished by turning the 3 screws located on the hinges. The hinges can be adjusted up, down, in, out, and left to right. Tightening of the hinge mounting screws and door mounting screws may also be needed periodically. Touch up kits can also be purchased to help hide or cover up small scratches and chips that may occur over the life of your cabinets.

THINGS TO AVOID

- Avoid using any commercial grade chemicals or cleaners on the surface of your cabinets.
- Avoid allowing any liquids or foods, especially those with strong dyes or bright coloring, from sitting on the cabinet surfaces. These items could stain or damage the cabinet finish.
- Avoid using any abrasive products, such as steel wool or scouring pads, on the surface of the cabinets.
- Avoid hanging any wet or damp clothes on cabinet doors and drawer faces.
- Avoid positioning any countertop appliances under the wall cabinets. These appliances can produce heat or steam that could damage the bottom and face of wall cabinets.
- Avoid long-term exposer to direct sunlight.

ORDERING FORM

ACCOUNT #

DOOR STYLE

CONTACT

P.O. BOX

PHONE

DATE

FAX

SHIP DATE REQUESTED

FINISH

EMAIL

SHIP TO

	QUANTITY	CABINET CODE	MODIFICATION	PRICE
1				
2				
3				
4				
5				
6				
7				
8				
9				
10				
11				
12				
13				
14				
15				
16				
17				
18				
19				
20				
21				
22				
23				
24				
25				
26				
27				
28				
29				
30				

DELIVERY ☐

PICKUP ☐

ASSEMBLED ☐

RTA ☐

DEALER COST MULTIPLIER

DEALER COST

TAX

TOTAL

CUSTOMER SIGNATURE

ORDERING FORM

ACCOUNT #

DOOR STYLE

CONTACT

P.O. BOX

PHONE

DATE

FAX

SHIP DATE REQUESTED

FINISH

EMAIL

SHIP TO

	QUANTITY	CABINET CODE	MODIFICATION	PRICE
1				
2				
3				
4				
5				
6				
7				
8				
9				
10				
11				
12				
13				
14				
15				
16				
17				
18				
19				
20				
21				
22				
23				
24				
25				
26				
27				
28				
29				
30				

DELIVERY ☐

PICKUP ☐

ASSEMBLED ☐

RTA ☐

DEALER COST MULTIPLIER

DEALER COST

TAX

TOTAL

CUSTOMER SIGNATURE

CLAIM FORM

CONTACT

ACCOUNT #

PHONE

PURCHASE ORDER #

FAX

SALES ORDER #

EMAIL

DATE

SUBMISSION

Please email this form to the address corresponding to the location from which the original order was generated.

info@procraftchicago.com • info@procraftnashville.com • info@procraftmiami.com • info@procraftdallas.com

info@procrafthouston.com • info@procraftseattle.com • info@procraftatlanta.com

	QUANTITY	CABINET CODE	DESCRIPTION	REASON CODE	REQUEST CODE
1					
2					
3					
4					
5					
6					
7					
8					
9					
10					
11					
12					
13					
14					
15					
16					
17					
18					
19					
20					

REASON CODES
1–Wrong Quantity Received
2–Wrong Merchandise
3–Defective Product
4–Damaged during transit
5–Missing Components
6–Other

REQUEST CODES
1–Exchange
2–Replace
3–Credit
4–Other

REQUIREMENTS

All requests must have documentation & pictures attached for processing. We will not be able to process without picture documentation. Please be as detailed as possible when describing your claim. All claims will be processed in the order in which they are received. Shipment and claim summary will be provided when a claim has been processed.

CUSTOMER SIGNATURE

DEALER APPLICATION

OFFICE USE ONLY

ACCOUNT # SALES REP # MULTIPLIER #

BASIC INFORMATION	
Company Name	Address
	City, State, Zip
Representative	Annual Cabinet Sales
Phone	Date Business Started
Email	# Import Lines Carried
Fax	# Domestic Lines Carried
Showroom SQ FT	Showroom YES NO

OWNER INFORMATION	
Owner Name	Owner's Address
Phone	City, State, Zip
Email	

REFERENCES	
Company Name	Address
Phone	City, State, Zip
Email	Type of Account

Company Name	Address
Phone	City, State, Zip
Email	Type of Account

By submitting this application you authorize ProCraft Cabinetry to inquire about your trade references. Sign and return complete application to the following ProCraft branch that is geographically closest to your location:

info@procraftchicago.com • info@procraftnashville.com • info@procraftmiami.com • info@procraftdallas.com
info@procrafthouston.com • info@procraftseattle.com • info@procraftatlanta.com

SIGNATURE DATE

TITLE

SIGNATURE DATE

TITLE



MODIFICATIONS

MODIFICATIONS

KEY

PFG	PREP FOR GLASS	IDT	INCREASE DEPTH TALL	RDT	REDUCE DEPTH TALL
FIW	FINISH INTERIOR WALL	RDB	REDUCE DEPTH BASE	CTK	CUT TOE KICK
FIT	FINISH INTERIOR TALL	RDD	REDUCE DEPTH DRAWER	SKIN	APPLYING SKIN TO CABINETS
IDW	INCREASE DEPTH WALL	RDW	REDUCE DEPTH WALL		

SKU	RDB	RDD	RDW	RDT	IDW	IDT	CTK	FIW	FIT	PFG
B12	•						•			•
B15	•						•			•
B18	•						•			•
B21	•						•			•
B24	•						•			•
B27	•						•			•
B30	•						•			•
B33	•						•			•
B36	•						•			•
B39	•						•			•
B42	•						•			•
W3012			•		•			•		•
W3015			•		•			•		•
W3018			•		•			•		•
W3021			•		•			•		•
W3024			•		•			•		•
W3324			•		•			•		•
W3612			•		•			•		•
W3615			•		•			•		•
W3618			•		•			•		•
W3621			•		•			•		•
W3624			•		•			•		•
W361224			•		•			•		•

MODIFICATIONS

SKU	RDB	RDD	RDW	RDT	IDW	IDT	CTK	FIW	FIT	PFG
W361524			•		•			•		•
W361824			•		•			•		•
W362124			•		•			•		•
W421224			•		•			•		•
W481224			•		•			•		•
W362424			•		•			•		•
W1818			•		•			•		•
W0930			•		•			•		•
W1230			•		•			•		•
W1530			•		•			•		•
W1830			•		•			•		•
W2130			•		•			•		•
W2430			•		•			•		•
W2730			•		•			•		•
W3030			•		•			•		•
W3330			•		•			•		•
W3630			•		•			•		•
W3930			•		•			•		•
W4230			•		•			•		•
W0936			•		•			•		•
W1236			•		•			•		•
W1536			•		•			•		•
W1836			•		•			•		•
W2136			•		•			•		•
W2436			•		•			•		•
W2736			•		•			•		•
W3036			•		•			•		•

MODIFICATIONS

SKU	RDB	RDD	RDW	RDT	IDW	IDT	CTK	FIW	FIT	PFG
W3336			•		•			•		•
W3636			•		•			•		•
W3936			•		•			•		•
W4236			•		•			•		•
W0942			•		•			•		•
W1242			•		•			•		•
W1542			•		•			•		•
W1842			•		•			•		•
W2142			•		•			•		•
W2442			•		•			•		•
W2742			•		•			•		•
W3042			•		•			•		•
W3342			•		•			•		•
W3642			•		•			•		•
W3942			•		•			•		•
W4242			•		•			•		•
WSC2430										•
WSC2436										•
WSC2442										•
WDC2418										•
WDC2430								•		•
WDC2436								•		•
WSC2442								•		•
WDC2418								•		•
WDC2430								•		•
WDC2436								•		•
WDC2442								•		•

MODIFICATIONS

SKU	RDB	RDD	RDW	RDT	IDW	IDT	CTK	FIW	FIT	PFG
WDC273615								•		•
WDC274215								•		•
3DB12		•					•			
3DB15		•					•			
3DB18		•					•			
3DB21		•					•			
3DB24		•					•			
3DB30		•					•			
3DB36		•					•			
2DB30		•					•			
2DB36		•					•			
SB24	•						•			•
SB30	•						•			•
SB33	•						•			•
SB36	•						•			•
SB39	•						•			•
SB42	•						•			•
FS36	•						•			•
FS39	•						•			•
B09SP							•			
BWB18							•			
TP188424				•		•	•		•	•
TP189024				•		•	•		•	•
TP189624				•		•	•		•	•
TP248424				•		•	•		•	•
TP249024				•		•	•		•	•
TP249624				•		•	•		•	•

MODIFICATIONS

SKU	RDB	RDD	RDW	RDT	IDW	IDT	CTK	FIW	FIT	PFG
TP308424				•		•	•		•	•
TP309024				•		•	•		•	•
TP309624				•		•	•		•	•
OC338424				•		•	•		•	•
OC339024				•		•	•		•	•
OC339624				•		•	•		•	•
FDB18		•					•			
VB12	•						•			•
VB15	•						•			•
VDB12		•					•			
VDB15		•					•			
VDB18		•					•			
VDB24		•					•			
VSB24	•						•			•
VSB30	•						•			•
VSB36	•						•			•
VSD30L		•					•			•
VSD30R		•					•			•
VSD36L		•					•			•
VSD36R		•					•			•
VSD42		•					•			•
VSD48		•					•			•
BOX-ROT15	•									
BOX-ROT18	•									
BOX-ROT21	•									
BOX-ROT24	•									
BOX-ROT30	•									

MODIFICATIONS

SKU	RDB	RDD	RDW	RDT	IDW	IDT	CTK	FIW	FIT	PFG
BOX-ROT36	•									
W1212GD			•		•			•		
W1512GD			•		•			•		
W1812GD			•		•			•		
W2112GD			•		•			•		
W2412GD			•		•			•		
W2712GD			•		•			•		
W3012GD			•		•			•		
W3312GD			•		•			•		
W3612GD			•		•			•		
WDC2412GD			•		•			•		
WBC3030			•		•			•		•
WBC3630			•		•			•		•
WBC3036			•		•			•		•
WBC3636			•		•			•		•
WBC3042			•		•			•		•
WBC3642			•		•			•		•
WMO3030								•		•
WMO3036								•		•
WMO3042								•		•
W1530GD			•		•			•		
W1536GD			•		•			•		
W1542GD			•		•			•		
W2430GD			•		•			•		
W2436GD			•		•			•		
W2442GD			•		•			•		
W3030GD			•		•			•		

MODIFICATIONS

SKU	RDB	RDD	RDW	RDT	IDW	IDT	CTK	FIW	FIT	PFG
W3036GD			•		•			•		
W3042GD			•		•			•		
WDC2430GD								•		
WDC2436GD								•		
WDC2442GD								•		
WDC273615GD								•		
WDC274215GD								•		
B09FH	•						•			•
B12FH	•						•			•
B15FH	•						•			•
B18FH	•						•			•
B21FH	•						•			•
B24FH	•						•			•
B27FH	•						•			•
B30FH	•						•			•
B33FH	•						•			•
B36FH	•						•			•
B39FH	•						•			•
B42FH	•						•			•
DSB36							•			
LSB33							•			
LSB36							•			
BER36							•			
BAE24							•			
BLB39/42	•						•			
BLB42/45	•						•			
BMD30	•						•			

MODIFICATIONS

NOTES

PFG	Specify which door(s) i.e. Lower left door or both top pantry doors. Glass sold seperately.
IDW	Specify depth to face frame. Max Depth 30"
IDT	Specify depth to face frame. Max Depth 30"
RDB	Specify depth to face frame. Min. Depth 15". Drawers may not have dovetail after modification.
RDD	Specify depth to face frame. Min. Depth 15". Drawers may not have dovetail after modification.
RDW	Specify depth to face frame. Min. Depth 9"
RDT	Specify depth to face frame. Min. Depth 9"
CTK	Specify height of toe kick 0" to 4.5"
SKIN	Skins sold seperately

PROCRAFT CHICAGO
4620 Roosevelt Rd. Hillside, IL 60162
p: 708.234.1700 | f: 708.234.1701
e: info@procraftchicago.com

PROCRAFT NASHVILLE
429 McNally Dr. Nashville, TN 37211
p: 615.528.0399 | f: 615.528.0311
e: info@procraftcabinetry.com

PROCRAFT FLORIDA
1850 S. Powerline Rd. Deerfield Beach, FL 33442
p: 754.212.2277 | f: 754.212.2270
e: info@procraftmiami.com

PROCRAFT DALLAS
2330 Alberta Dr, Suite 100 Dallas, TX 75229
p: 469.607.2588 | f: 469.480.2599
e: info@procraftdallas.com

PROCRAFT HOUSTON
4647 Pine Timbers St. Houston, TX 77041
p: 832.203.5860 | f: 832.649.3467
e: info@procrafthouston.com

PROCRAFT SEATTLE
20848 84th Ave. South Kent, WA 98032
p: 253.236.8608 | f: 253.236.8815
e: info@procraftseattle.com

PROCRAFT ATLANTA
6684 Jimmy Carter Blvd. Suite 200, Norcross, GA 30071
p: 770.837.0909 | f: 770.837.0930
e: info@procraftatlanta.com

PROCRAFT CABINETRY
Professionally Crafted Cabinets

5 YEAR WARRANTY

KCMA QUALITY TESTED CABINET

Milania

NKBA NATIONAL KITCHEN+BATH ASSOCIATION

CARB2 compliant