PROCRAFT
CABINETRY
WASHINGTON D.C.

ProCraft Cabinetry DC · Summer 2026

Product Specification Guide

Every door style, cabinet, accessory and modification we make — with spec-book drawings, dimensions and notes.

28	262	88
Door styles	SKUs	Product pages



ProCraft Cabinetry DC
6750 Santa Barbara Court, Suite B,
Elkridge, MD 21075

410-863-9800 ·
sales@procraftdc.com
dc-portal.procraftcabinetry.com

Printed November 2026
Sizes and availability can change. Check the portal for the latest.

Inside This Guide

Contents

01	Door Styles	28 styles
02	Box Construction	
03	Wall Cabinets	23 product pages
04	Base Cabinets	20 product pages
05	Tall Cabinets	4 product pages
06	Vanity Cabinets	9 product pages
07	Hoods	1 product page
08	Accessories	30 product pages
09	Sales Aids	1 product page
10	Modifications	
11	Warranty	

Door Styles

Price group and availability. Group A is the entry price, C the premium.

In-Stock Door Styles 10

In stock at our Elkridge warehouse, ready on our usual lead times.

PRICE GROUP A



Liberty Shaker, Grey

LSG Group A

In-Stock

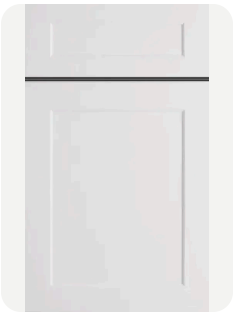

Liberty Shaker, White

LSW Group A

In-Stock

Slim Shaker, White

SSW Group A

In-Stock

PRICE GROUP B



Liberty Shaker, Ashen

LSA Group B

In-Stock



Liberty Shaker, Black

LSBK Group B

In-Stock



Liberty Shaker, Blue

LSB Group B

In-Stock



Liberty Shaker, Evergreen

LSEG Group B

In-Stock



Liberty Shaker, Karamel

LSK Group B

In-Stock



Liberty Shaker, Oatmeal

LSO Group B

In-Stock



Liberty Shaker, Pine

LSP Group B

In-Stock

Special Order (Not In-Stock) Door Styles 18

2–3 week lead time. Inventory needs to be checked with our other location before the order can be confirmed and paid. A stock check is only good for 1–2 days.

Textured veneer finishes (LSBO, LSRW, SSRW, ASTI, ASTR): the door and frame are our standard solid birch, with a textured wood veneer applied on top as the finish.

PRICE GROUP A

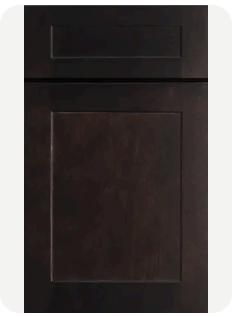

Liberty Shaker, Espresso

LSE Group A

Special Order

PRICE GROUP B



Liberty Shaker, Cashew

LSCA · Group B

Special Order

Coming Soon



Liberty Shaker, Cemento

LSC · Group B

Special Order

Coming Soon



Liberty Shaker, Mushroom

LSM · Group B

Special Order

Coming Soon

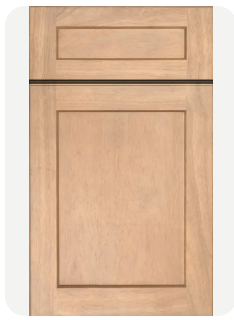

Liberty Shaker, Rift

LSR · Group B

Special Order

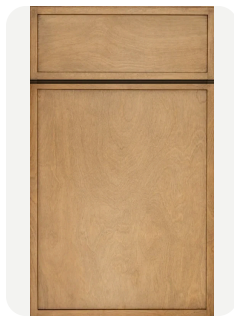

Slim Shaker, Karamel

SSK · Group B

Special Order



Slim Shaker, Oatmeal

SSO · Group B

Special Order



Arlington, Oatmeal

AO · Group B

Special Order

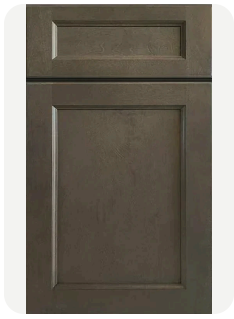

Essence, Cemento

ESC · Group B

Special Order

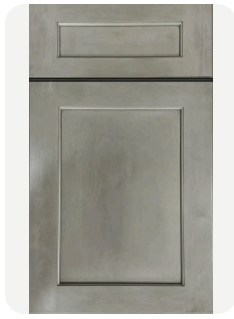

Newport, Millstone

NME · Group B

Special Order

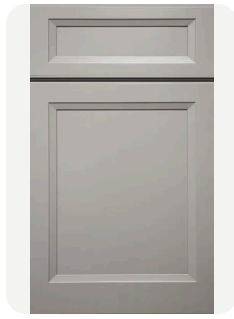

Windsor, Ashen

WA · Group B

Special Order

PRICE GROUP C



Liberty Shaker, Black Oak

LSBO · Group C

Special Order

Textured Veneer

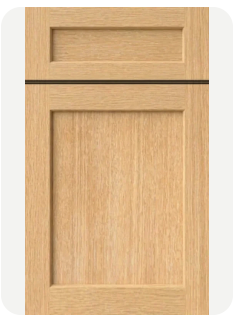

Liberty Shaker, Rift Oak-Wash

LSRW · Group C

Special Order

Textured Veneer

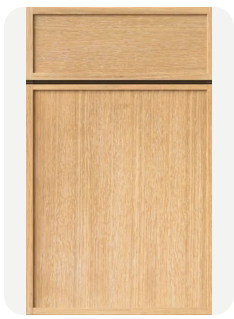

Slim Shaker, Rift Oak-Wash

SSRW · Group C

Special Order

Textured Veneer



Aspen, Oatmeal

ASOA · Group C

Special Order

Coming Soon

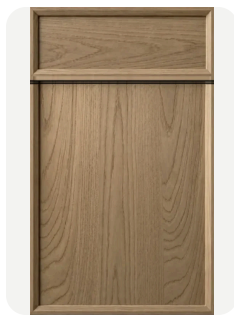

Aspen, Timber

ASTI · Group C

Special Order

Textured Veneer

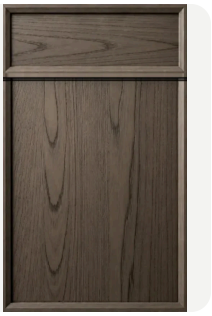

Aspen, Truffle

ASTR Group C

Special Order

Textured Veneer



Charleston, Driftwood

CD Group C

Special Order

Box Construction

What goes into every ProCraft Cabinetry DC cabinet.



1 Box & face frame

- ¾″ solid wood face frame, 1½″ wide
- ½″ furniture-grade plywood box
- Solid wood corner blocks
- Half-dovetail locking joinery on cabinet sides

2 Drawer boxes

- ⅝″ solid wood drawer box
- Dovetail joinery
- ⅜″ plywood drawer bottom

3 Hinges

- 6-way adjustable
- Soft close

4 Drawer glides

- Full extension
- Soft close

5 Shelving

- ¾″ furniture-grade plywood shelves
- Secure locking shelf clips

Drawer sizes

	Drawer Faces	Box Depth
2-drawer Base	Top face 14¼″ · bottom face 14⅜″	Both boxes 9¼″ deep
3-drawer Base	Top face 6¾″ · middle & bottom 10¾″	Top box 3⅜″ · middle & bottom 6¼″

Wall Cabinets

23 pages · 105 SKUs

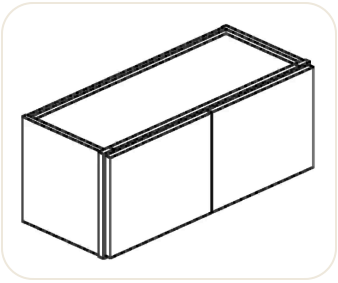

12″ High Cabinets

p. 8

SKU	W	H	D
W3012	30″	12″	12″
W3312	33″	12″	12″
W3612	36″	12″	12″

AVAILABLE MODIFICATIONS

Reduce depth – ½″ increments, min. 6″ · Increase depth – ½″ increments, max. 24″ · Prep doors for glass · Ship doors loose · Finished interior

NOTES

- No shelf
- No center stile

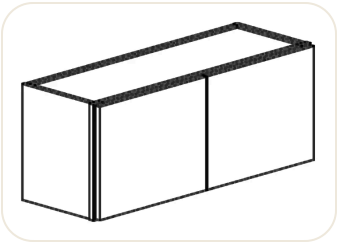

15″ High Cabinets

p. 8

SKU	W	H	D
W3015	30″	15″	12″
W3615	36″	15″	12″

AVAILABLE MODIFICATIONS

Reduce depth – ½″ increments, min. 6″ · Increase depth – ½″ increments, max. 24″ · Prep doors for glass · Ship doors loose · Finished interior

NOTES

- No shelf
- No center stile

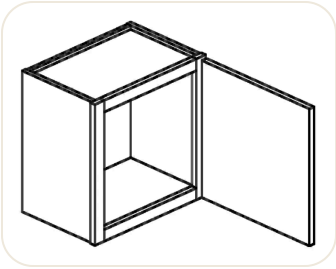

18″ High Cabinets

p. 8

SKU	W	H	D
W1218 ✱	12″	18″	12″
W1518 ✱	15″	18″	12″
W1818	18″	18″	12″
W2118 ✱	21″	18″	12″
W2418 ✱	24″	18″	12″
W2718 ✱	27″	18″	12″
W3018	30″	18″	12″
W3318 ✱	33″	18″	12″
W3618	36″	18″	12″

AVAILABLE MODIFICATIONS

Reduce depth – ½″ increments, min. 6″ · Increase depth – ½″ increments, max. 24″ · Prep doors for glass · Ship doors loose · Finished interior

NOTES

- No shelf
- No center stile

✱ Special availability

- These SKUs are only available at select ProCraft Cabinetry locations.
- Availability may vary by style and color.
- Please check the ProCraft Cabinetry DC Dealer Portal for availability.

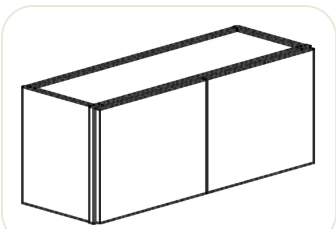

21″ High Cabinets

p. 9

SKU	W	H	D
W3021	30″	21″	12″
W3621	36″	21″	12″

AVAILABLE MODIFICATIONS

Reduce depth – ½″ increments, min. 6″ · Increase depth – ½″ increments, max. 24″ · Prep doors for glass · Ship doors loose · Finished interior

NOTES

- No shelf
- No center stile

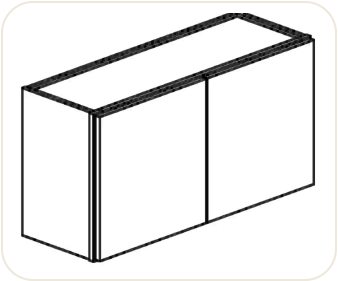

24″ High Cabinets

p. 9

SKU	W	H	D
W3024	30″	24″	12″
W3324	33″	24″	12″
W3624	36″	24″	12″

AVAILABLE MODIFICATIONS

Reduce depth – ½″ increments, min. 6″ · Increase depth – ½″ increments, max. 24″ · Prep doors for glass · Ship doors loose · Finished interior

NOTES

- 1 adjustable shelf
- No center stile

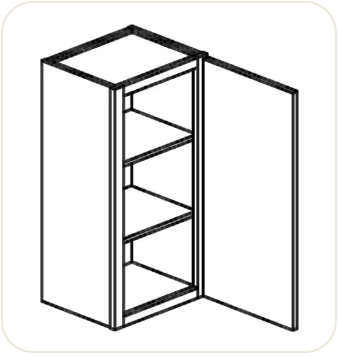

30″ High Cabinets

p. 9

SKU	W	H	D
W0930	9″	30″	12″
W1230	12″	30″	12″
W1530	15″	30″	12″
W1830	18″	30″	12″
W2130	21″	30″	12″
W2430	24″	30″	12″
W2730	27″	30″	12″
W3030	30″	30″	12″
W3330	33″	30″	12″
W3630	36″	30″	12″
W3930	39″	30″	12″
W4230	42″	30″	12″

AVAILABLE MODIFICATIONS

Reduce depth – ½″ increments, min. 6″ · Increase depth – ½″ increments, max. 24″ · Prep doors for glass · Ship doors loose · Finished interior

NOTES

- 2 adjustable shelves
- Cabinets 24 inches or wider feature butt doors

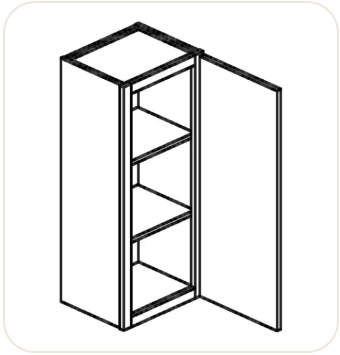

36″ High Cabinets

p. 10

SKU	W	H	D
W0936	9″	36″	12″
W1236	12″	36″	12″
W1536	15″	36″	12″
W1836	18″	36″	12″
W2136	21″	36″	12″
W2436	24″	36″	12″
W2736	27″	36″	12″
W3036	30″	36″	12″
W3336	33″	36″	12″
W3636	36″	36″	12″
W3936	39″	36″	12″
W4236	42″	36″	12″

AVAILABLE MODIFICATIONS

Reduce depth – ½″ increments, min. 6″ · Increase depth – ½″ increments, max. 24″ · Prep doors for glass · Ship door loose · Finished interior

NOTES

- 2 adjustable shelves
- Cabinets 24 inches or wider feature butt doors

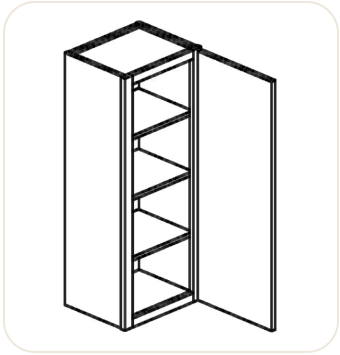

42″ High Cabinets

p. 11

SKU	W	H	D
W0942	9″	42″	12″
W1242	12″	42″	12″
W1542	15″	42″	12″
W1842	18″	42″	12″
W2142	21″	42″	12″
W2442	24″	42″	12″
W2742	27″	42″	12″
W3042	30″	42″	12″
W3342	33″	42″	12″
W3642	36″	42″	12″
W3942	39″	42″	12″
W4242	42″	42″	12″

AVAILABLE MODIFICATIONS

Reduce depth – ½″ increments, min. 6″ · Increase depth – ½″ increments, max. 24″ · Prep doors for glass · Ship doors loose · Finished interior

NOTES

- 3 adjustable shelves
- Cabinets 24 inches or wider feature butt doors

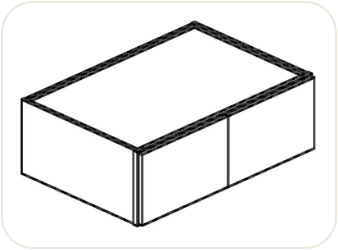

24″ Deep Cabinets

p. 11

SKU	W	H	D
W302424	30″	24″	24″
W361224	36″	12″	24″
W361524	36″	15″	24″
W361824	36″	18″	24″
W362124	36″	21″	24″
W362424	36″	24″	24″
W421224	42″	12″	24″
W481224	48″	12″	24″

AVAILABLE MODIFICATIONS

Reduce depth – ½″ increments, min. 6″ · Prep doors for glass · Ship doors loose · Finished interior

NOTES

- W362424 has 1 adjustable shelf; other 24″ deep cabinets do not have an adjustable shelf.
- No center stile

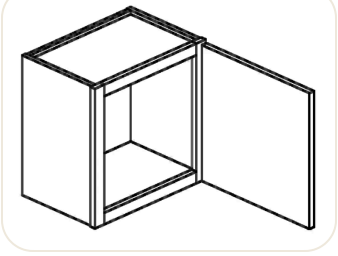

12″ High Door Cabinet

p. 12

SKU	W	H	D
W1212	12″	12″	12″
W1512	15″	12″	12″
W1812	18″	12″	12″
W2112	21″	12″	12″

AVAILABLE MODIFICATIONS

Reduce depth – ½″ increments, min. 6″ · Increase depth – ½″ increments, max. 24″ · Prep doors for glass · Ship door loose · Finished interior

NOTES

- No shelf
- Does not include glass insert

Special availability

- These SKUs are only available at select ProCraft Cabinetry locations.
- Availability may vary by style and color.
- Please check the ProCraft Cabinetry DC Dealer Portal for availability.

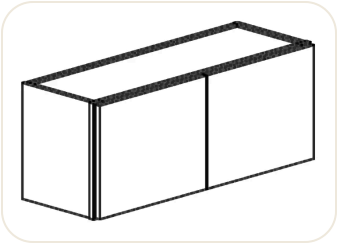

12″ High Double Door Cabinet

p. 12

SKU	W	H	D
W2412	24″	12″	12″
W2712	27″	12″	12″
W3012	30″	12″	12″
W3312	33″	12″	12″
W3612	36″	12″	12″

AVAILABLE MODIFICATIONS

Reduce depth – ½″ increments, min. 6″ · Increase depth – ½″ increments, max. 24″ · Prep doors for glass · Ship doors loose · Finished interior

NOTES

- No shelf
- No center stile
- Does not include glass insert

Special availability

- These SKUs are only available at select ProCraft Cabinetry locations.
- Availability may vary by style and color.
- Please check the ProCraft Cabinetry DC Dealer Portal for availability.

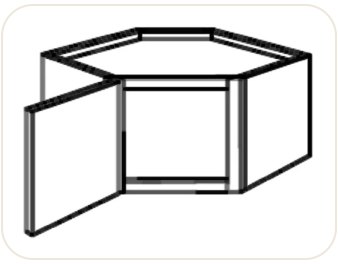

12″ High Diagonal Door Cabinet

p. 12

SKU	W	H	D
WDC2412	24″	12″	12″

AVAILABLE MODIFICATIONS

Prep doors for glass · Ship door loose · Finished interior

NOTES

- No shelf
- Does not include glass insert

Special availability

- These SKUs are only available at select ProCraft Cabinetry locations.
- Availability may vary by style and color.
- Please check the ProCraft Cabinetry DC Dealer Portal for availability.

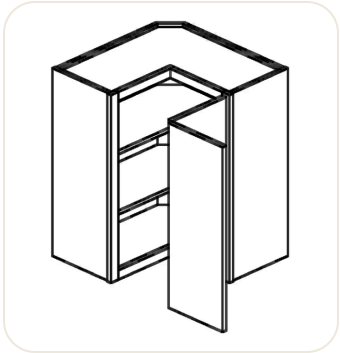

Square Corner Cabinet

p. 16

SKU	W	H	D
WSC2430	24″	30″	12″
WSC2436	24″	36″	12″
WSC2442	24″	42″	12″

AVAILABLE MODIFICATIONS

Ship door loose

NOTES

- 30″ & 36″ high have 2 adjustable shelves
- 42″ high has 3 adjustable shelves

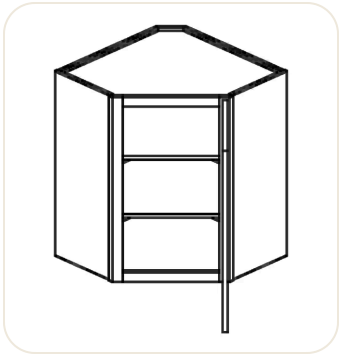

Diagonal Corner Cabinet

p. 16

SKU	W	H	D
WDC2418	24″	18″	12″
WDC2430	24″	30″	12″
WDC2436	24″	36″	12″
WDC2442	24″	42″	12″
WDC273615	27″	36″	15″
WDC274215	27″	42″	15″

AVAILABLE MODIFICATIONS

Prep door for glass | Ship door loose | Finished interior

NOTES

- 18″ high has no shelf
- 30″ & 36″ high have 2 adjustable shelves
- 42″ high has 3 adjustable shelves
- 12″ Deep cabinet requires use of filler to prevent doors from binding on adjacent cabinet.

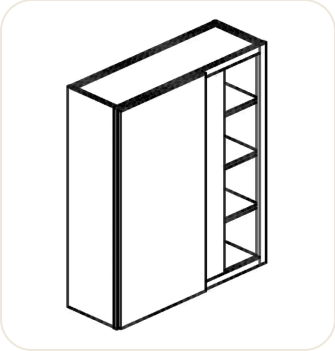

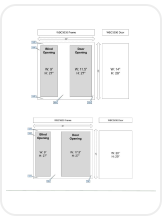

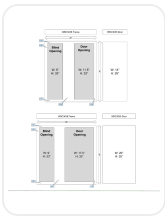

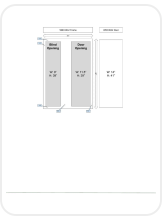

Blind Corner Cabinet

p. 17

SKU	W	H	D
WBC3030	30″	30″	12″
WBC3036	30″	36″	12″
WBC3042	30″	42″	12″
WBC3630	36″	30″	12″
WBC3636	36″	36″	12″
WBC3642	36″	42″	12″

AVAILABLE MODIFICATIONS

Reduce depth – ½″ increments, min. 6″ · Increase depth – ½″ increments, max. 24″ · Prep door for glass · Ship door loose · Finished interior · Void Blind

NOTES

- Right hinge = right blind (shown)
- Left hinge = left blind
- 30″ & 36″ high have 2 adjustable shelves
- 42″ high has 3 adjustable shelves
- Minimum 1 ½″ filler must be installed perpendicular to allow door to clear adjacent cabinet. See fig. A

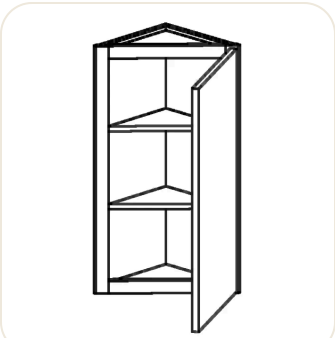

Angle End Cabinet

p. 21

SKU	W	H	D
WAE30	12″	30″	12″
WAE36	12″	36″	12″
WAE42	12″	42″	12″

AVAILABLE MODIFICATIONS

Prep doors for glass · Ship doors loose

NOTES

- 30″ & 36″ high have 2 adjustable shelves
- 42″ high has 3 adjustable shelves
- Comes standard with a finished interior

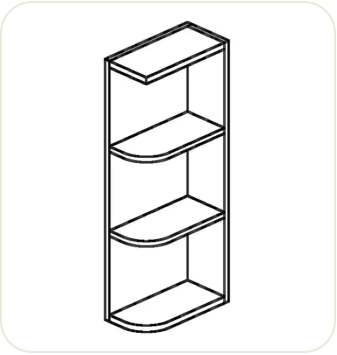

Open End Shelf Cabinet

p. 21

SKU	W	H	D
WOES0630	6″	30″	12″
WOES0636	6″	36″	12″
WOES0642	6″	42″	12″

AVAILABLE MODIFICATIONS

N/A

NOTES

- 30″ & 36″ high have 2 fixed shelves (shown)
- 42″ high has 3 fixed shelves
- Can be ordered left or right (right shown)

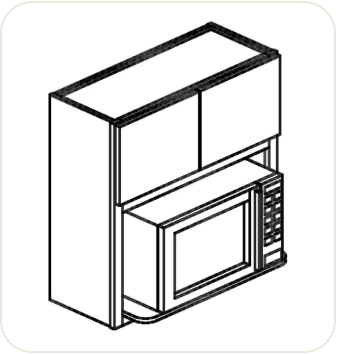

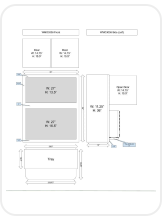

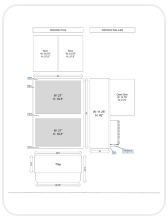

Microwave Oven Cabinet

p. 22

SKU	W	H	D
WMO3030	30″	30″	12″
WMO3036	30″	36″	12″
WMO3042	30″	42″	12″

AVAILABLE MODIFICATIONS

Reduce depth – ½″ increments, min. 6″ (specify depth of cabinet, not including microwave shelf)

Increase depth – ½″ increments, max. 24″ (Increased depth will result in loss of microwave shelf)

Prep doors for glass

Ship door loose

Finished interior (only needed when increasing depth)

NOTES

- Comes with removable shelf.
- Removable shelf protrudes 5″ past face frame.
- Comes standard with finished interior.
- If increasing depth, you must add finished interior mod.
- 12″ depth is the cabinet box; the removable microwave shelf is not included in the depth.

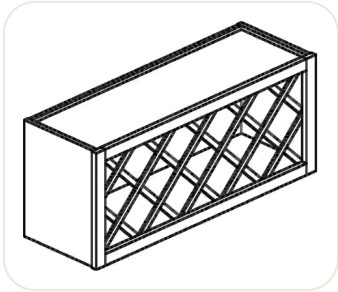

Wine Rack Lattice

p. 25

SKU	W	H	D
WR3015	30″	15″	12″
WR3615	36″	15″	12″

MODIFICATIONS

None available

NOTES

- 30″ wide holds 10 bottles
- 36″ wide holds 13 bottles
- Comes standard with finished interior

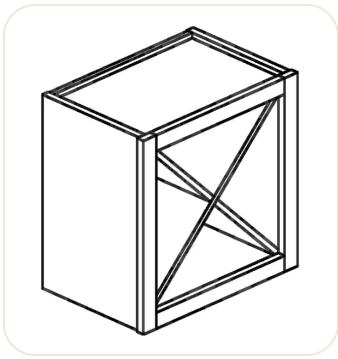

Wine X Rack

p. 25

SKU	W	H	D
WCX1818	18″	18″	12″

AVAILABLE MODIFICATIONS

Reduce depth – ½″ increments, min. 6″

NOTES

- Comes standard with finished interior

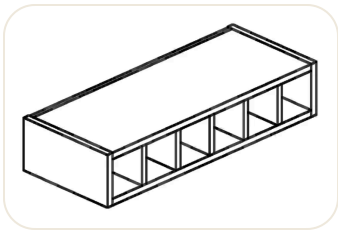

Slotted Cubby

p. 25

SKU	W	H	D
WCW630	30″	6″	12″

AVAILABLE MODIFICATIONS

Reduce depth – ½″ increments, min. 6″

NOTES

- Comes standard with finished interior
- Made from finished plywood, so you will see seams where joints meet.
- Can be turned vertically for use as a base cabinet; a toe kick platform must be built in the field.

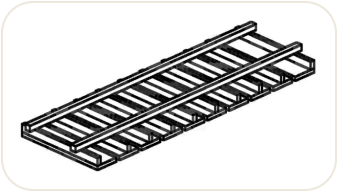

Stem Glass Holder

p. 26

SKU	W	H	D
SGH30	28.5″	2.75″	10.5″
SGH36	34.5″	2.75″	10.5″

MODIFICATIONS

None available

NOTES

- Designed to sit in the recess below a wall cabinet 30″ wide or 36″ wide.

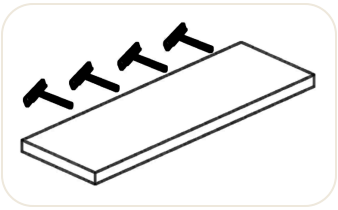

Floating Shelf

p. 26

SKU	W	H	D
WSF3612	36″	1.5″	12″
WSF4812	48″	1.5″	12″

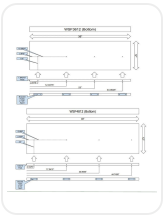

MODIFICATIONS

None available

NOTES

- Comes with 4 mounting brackets
- Brackets must be attached to wall stud
- Finished on 3 sides
- Shelves can be cut in width, but you may lose a mounting bracket location and will have 1 unfinished end.
- Holds 35 lbs max

Base Cabinets

20 pages · 52 SKUs

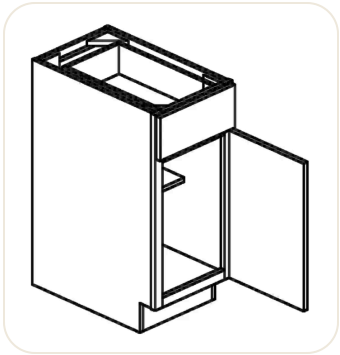

Single Door Base With Drawer

p. 29

SKU	W	H	D
B12	12″	34.5″	24″
B15	15″	34.5″	24″
B18	18″	34.5″	24″
B21	21″	34.5″	24″

AVAILABLE MODIFICATIONS

Reduce depth – ½″ increments, min. 12″ · Cut toe kick · Void top drawer · Ship door loose

NOTES

- 1 adjustable shelf

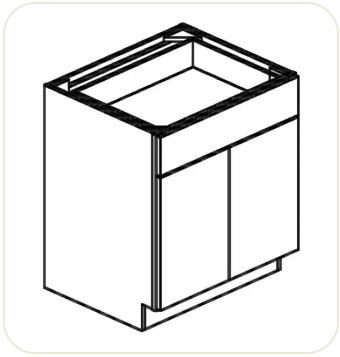

Double Door Base With Drawer

p. 29

SKU	W	H	D
B24	24″	34.5″	24″
B27	27″	34.5″	24″
B30	30″	34.5″	24″
B33	33″	34.5″	24″
B36	36″	34.5″	24″

AVAILABLE MODIFICATIONS

Reduce depth – ½″ increments, min. 12″ · Cut toe kick · Void top drawer · Ship doors loose

NOTES

- No center stile
- 1 adjustable shelf

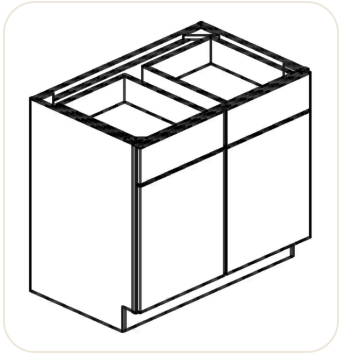

Double Door Base With 2 Drawers

p. 29

SKU	W	H	D
B39	39″	34.5″	24″
B42	42″	34.5″	24″

AVAILABLE MODIFICATIONS

Reduce depth – ½″ increments, min. 12″ | Cut toe kick | Void top drawers | Ship doors loose

NOTES

- No center stile
- 1 adjustable shelf

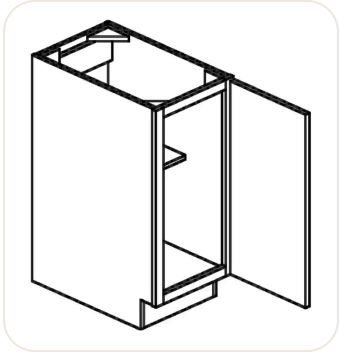

Single Door Full Height

p. 30

SKU	W	H	D
B09FH	9″	34.5″	24″
B12FH	12″	34.5″	24″
B15FH	15″	34.5″	24″
B18FH	18″	34.5″	24″
B21FH	21″	34.5″	24″

AVAILABLE MODIFICATIONS

Reduce depth – ½″ increments, min. 12″ | Prep door for glass | Cut toe kick | Ship door loose

NOTES

- A wall cabinet door & frame is used to create this cabinet which results in the reveal above the door matching that of a wall cabinet.
- The interior of the cabinet may have small holes where the unused drawer bracket clips normally sit.
- 1 adjustable shelf

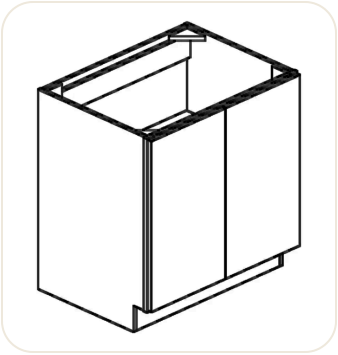

Double Door Full Height

p. 30

SKU	W	H	D
B24FH	24″	34.5″	24″
B27FH	27″	34.5″	24″
B30FH	30″	34.5″	24″
B33FH	33″	34.5″	24″
B36FH	36″	34.5″	24″
B39FH	39″	34.5″	24″
B42FH	42″	34.5″	24″

AVAILABLE MODIFICATIONS

Reduce depth – ½″ increments, min. 12″ | Prep door for glass | Cut toe kick | Ship doors loose

NOTES

- A wall cabinet door & frame is used to create this cabinet which results in the reveal above the door matching that of a wall cabinet.
- The interior of the cabinet may have small holes where the unused drawer bracket clips normally sit.
- No center stile
- 1 adjustable shelf

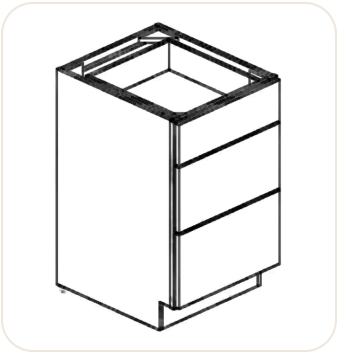

3 Drawer Base

p. 30

SKU	W	H	D
3DB12	12″	34.5″	24″
3DB15	15″	34.5″	24″
3DB18	18″	34.5″	24″
3DB21	21″	34.5″	24″
3DB24	24″	34.5″	24″
3DB30	30″	34.5″	24″
3DB36	36″	34.5″	24″

AVAILABLE MODIFICATIONS

Reduce depth – ½″ increments, min. 12″ | Cut toe kick | Void top drawer | Make bench cabinet (17¼″ Height) | Mid-rail between bottom and middle drawer is 2″ wide

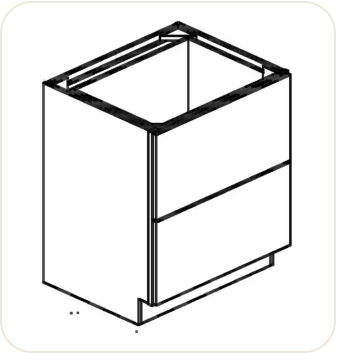

2 Drawer Base

p. 31

SKU	W	H	D
2DB30	30″	34.5″	24″
2DB36	36″	34.5″	24″

AVAILABLE MODIFICATIONS

Reduce depth – ½″ increments, min. 12″ | Cut toe kick | Void top drawer | Make bench cabinet (21⅛″ Height) | Mid-rail between drawers is 2″ wide

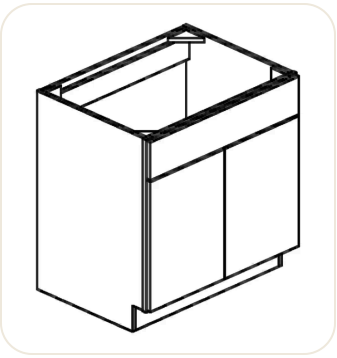

Sink Base With 1 False Drawer

p. 31

SKU	W	H	D
SB24	24″	34.5″	24″
SB30	30″	34.5″	24″
SB33	33″	34.5″	24″
SB36	36″	34.5″	24″

AVAILABLE MODIFICATIONS

Reduce depth – ½″ increments, min. 12″ | Cut toe kick | Ship doors loose

NOTES

- To create a SB27, use a B27 and void the top drawer.
- No center stile

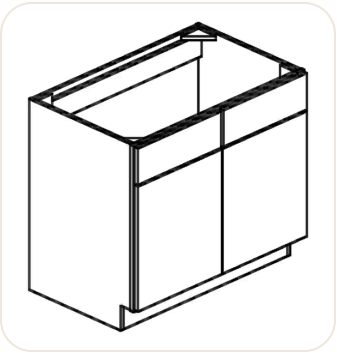

Sink Base With 2 False Drawers

p. 31

SKU	W	H	D
SB39	39″	34.5″	24″
SB42	42″	34.5″	24″

AVAILABLE MODIFICATIONS

Reduce depth – ½″ increments, min. 12″ | Cut toe kick | Ship doors loose

NOTES

- No center stile.

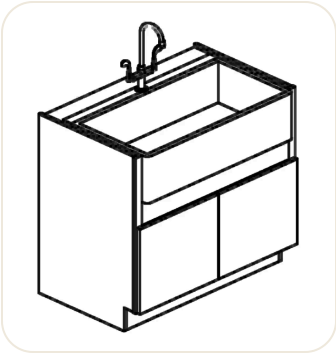

Farm Sink Base

p. 32

SKU	W	H	D
FS36	36″	34.5″	24″
FS39	39″	34.5″	24″

AVAILABLE MODIFICATIONS

Reduce depth – ½″ increments, min. 12″ · Cut toe kick

NOTES

- Trimmable face to be cut in field.

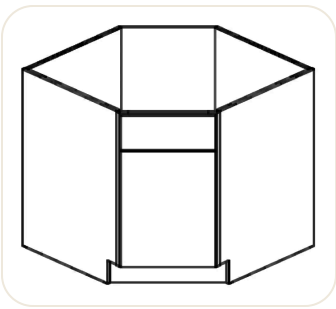

Diagonal Sink Base With False Drawer

p. 33

SKU	W	H	D
DSB36	36″	34.5″	24″

AVAILABLE MODIFICATIONS

Cut toe kick

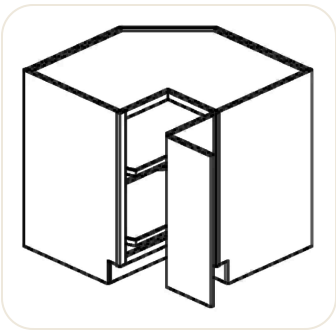

Square Corner Base With 2 Lazy Susans

p. 33

SKU	W	H	D
LSB33	33″	34.5″	24″
LSB36	36″	34.5″	24″

AVAILABLE MODIFICATIONS

Cut toe kick · Ship doors loose

NOTES

- Lazy Susan shelves are not adjustable
- Corner footprint is 33″ × 33″ (LSB33) or 36″ × 36″ (LSB36); each side is 24″ deep.

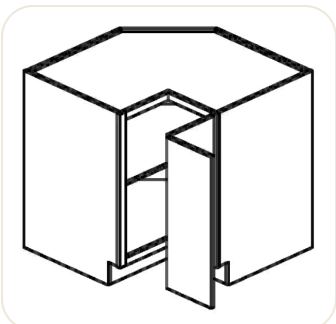

Square Corner Base With Shelf

p. 33

SKU	W	H	D
BER36	36″	34.5″	24″

AVAILABLE MODIFICATIONS

Cut toe kick · Ship doors loose

NOTES

- 1 adjustable shelf

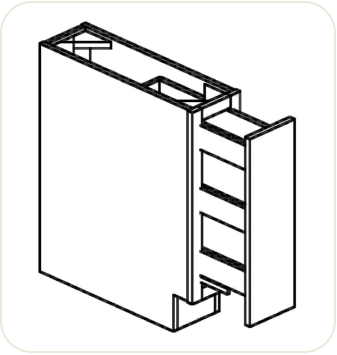

Pull Out Spice Rack Cabinet

p. 34

SKU	W	H	D
B09SP	9″	34.5″	24″

AVAILABLE MODIFICATIONS

Cut toe kick

NOTES

- Solid wood insert
- Tiers are not adjustable
- Not soft closing

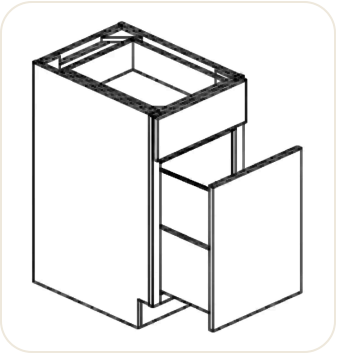

Pull Out Double Wastebasket Cabinet

p. 34

SKU	W	H	D
BWB18	18″	34.5″	24″

AVAILABLE MODIFICATIONS

Cut toe kick

NOTES

- Holds two 7-gallon waste baskets.
- When ordering through the dealer portal, waste baskets (qty. 2) are automatically included with this SKU.
- Waste baskets can be ordered separately
- SKU for (1) waste basket is PRO-WB.

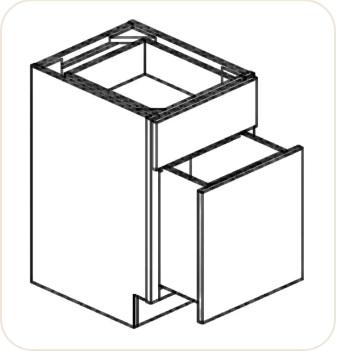

Pull Out File Drawer Cabinet

p. 34

SKU	W	H	D
FDB18	18″	30″	21″

AVAILABLE MODIFICATIONS

Cut toe kick

NOTES

- Hanging file system not included. This must be purchased separately through a 3rd party vendor.

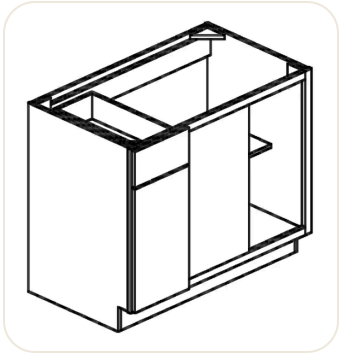

Blind Corner Base Cabinet

p. 35

SKU	W	H	D
BLB39/42	39″	34.5″	24″
BLB42/45	42″	34.5″	24″

AVAILABLE MODIFICATIONS

Reduce depth – ½″ increments, min. 12″ | Cut toe kick | Void Blind

NOTES

- Right hinge = right blind (shown)
- Left hinge = left blind
- BLB39/42 is 39″ wide but can be pulled 3″ from wall to fill a 42″ space
- BLB42/45 is 42″ wide but can be pulled 3″ from wall to fill a 45″ space
- Minimum 1.5″ filler must be installed perpendicular to allow drawer to clear adjacent cabinet with no hardware. See fig. A
- 1 adjustable shelf Fig. A

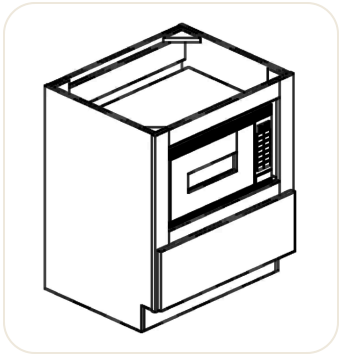

Base Microwave Cabinet With Drawer

p. 36

SKU	W	H	D
BMD30	30″	34.5″	24″

AVAILABLE MODIFICATIONS

Reduce depth – ½″ increments, min. 12″ | Cut toe kick

NOTES

- Fixed shelf above drawer to hold microwave.
- Comes standard with a finished interior.

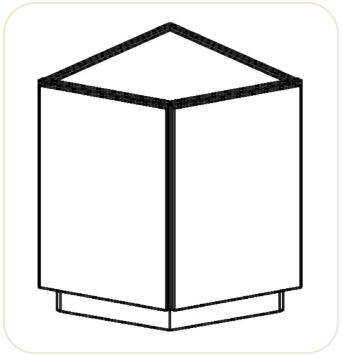

Base Angle End Cabinet

p. 37

SKU	W	H	D
BAE24	24″	34.5″	24″

AVAILABLE MODIFICATIONS

Cut toe kick

NOTES

- Comes standard with a finished interior.

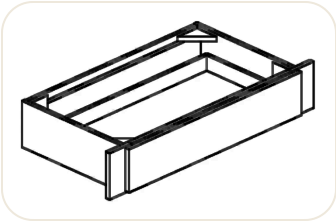

Knee Drawer

p. 37

SKU	W	H	D
KDC30/36	36″	7.5″	21″

AVAILABLE MODIFICATIONS

Reduce depth – ½″ increments, min. 12″

NOTES

- Total width is 36″. There are 3″ extended stiles on both sides of the drawer that can be trimmed down up to 3″ each to create a 30″ drawer overall.

Tall Cabinets

4 pages · 15 SKUs

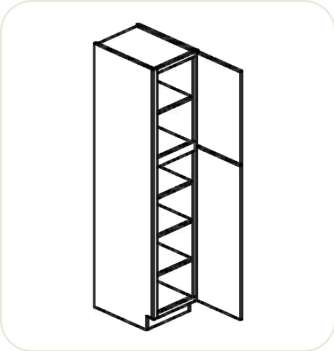

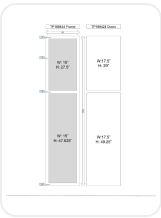

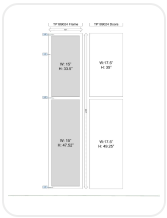

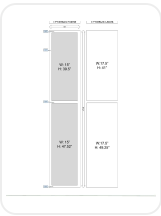

Tall Pantry Single Door

p. 39

SKU	W	H	D
TP188424	18″	84″	24″
TP189024	18″	90″	24″
TP189624	18″	96″	24″

AVAILABLE MODIFICATIONS

Reduce depth – ½″ increments, min. 6″ · Increase depth – ½″ increments, max. 24″ · Ship doors loose · Finished interior · Prep doors for glass · Cut toe kick

NOTES

- 84″ & 90″ high have 4 adjustable shelves
- 96″ high has 5 adjustable shelves
- Shelf depth is 21″

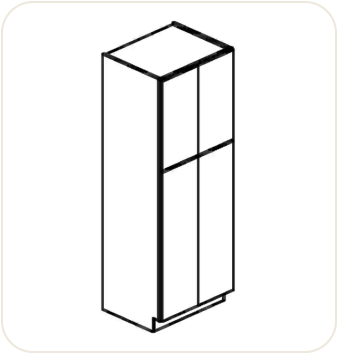

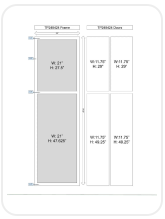

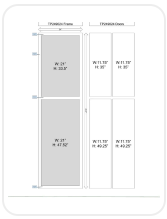

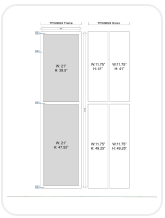

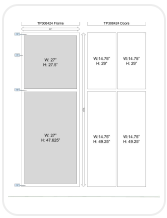

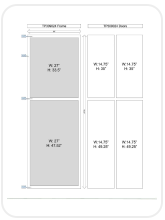

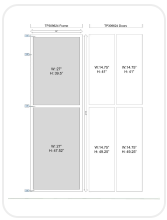

Tall Pantry Double Door

p. 39

SKU	W	H	D
TP248424	24″	84″	24″
TP249024	24″	90″	24″
TP249624	24″	96″	24″
TP308424	30″	84″	24″
TP309024	30″	90″	24″
TP309624	30″	96″	24″

AVAILABLE MODIFICATIONS

Reduce depth – ½″ increments, min. 6″ | Increase depth – ½″ increments, max. 24″ | Ship doors loose | Finished interior | Prep doors for glass | Cut toe kick

NOTES

- 84″ & 90″ high have 4 adjustable shelves
- 96″ high has 5 adjustable shelves
- Shelf depth is 21″

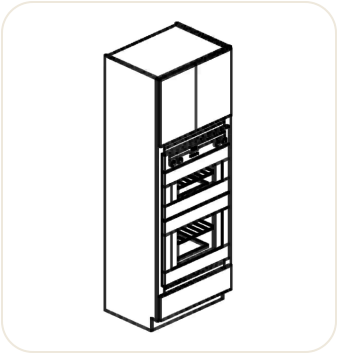

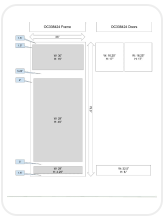

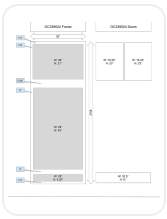

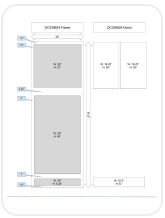

Double Oven Cabinet

p. 49

SKU	W	H	D
OC338424	33″	84″	24″
OC339024	33″	90″	24″
OC339624	33″	96″	24″

AVAILABLE MODIFICATIONS

Reduce depth – ½″ increments, min. 12″ | Prep doors for glass | Ship doors loose | Finished interior | Cut toe kick

NOTES

- All oven opening cuts to be done in the field by the customer.
- If out of stock, use the matching OCS33__24-3
- OC338424, OC339024, OC339624: **Special Order** door styles only (not available in In-Stock styles)

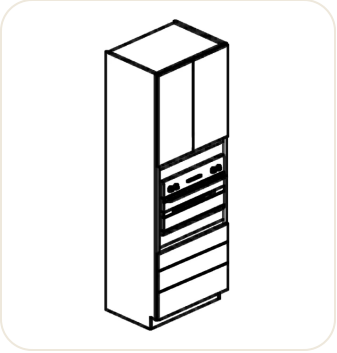

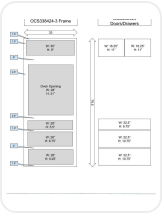

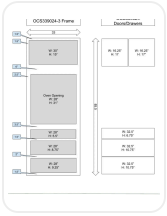

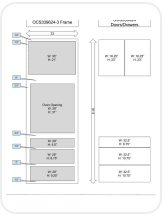

Single Oven Cabinet

p. 53

SKU	W	H	D
OCS338424-3	33″	84″	24″
OCS339024-3	33″	90″	24″
OCS339624-3	33″	96″	24″

AVAILABLE MODIFICATIONS

Reduce depth – ½″ increments, min. 12″ | Prep doors for glass | Ship doors loose | Finished interior | Cut toe kick

NOTES

- All oven opening cuts to be done in the field by the customer.
- If ordered RTA flatpack, the cabinet will come with all 3 drawers; you must modify the frame and box in the field to accommodate the number of drawers you need.
- This cabinet may be used for single ovens, oven/microwave combos, and double ovens depending on appliance dimensions. Please reference openings before ordering.

Special availability

- These SKUs are only available at select ProCraft Cabinetry locations.
- Availability may vary by style and color.
- Please check the ProCraft Cabinetry DC Dealer Portal for availability.

Vanity Cabinets

9 pages · 26 SKUs

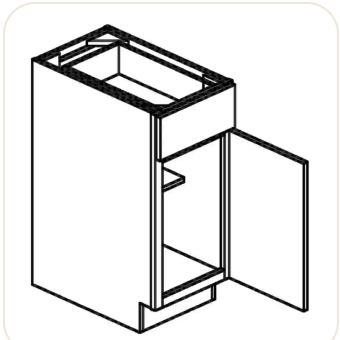

Single Door Base With Drawer

p. 58

SKU	W	H	D
VB12	12″	34.5″	21″
VB15	15″	34.5″	21″

AVAILABLE MODIFICATIONS

Reduce depth – ½″ increments, min. 12″ · Prep door for glass · Cut toe kick · Void top drawer · Ship door loose

NOTES

- 1 adjustable shelf

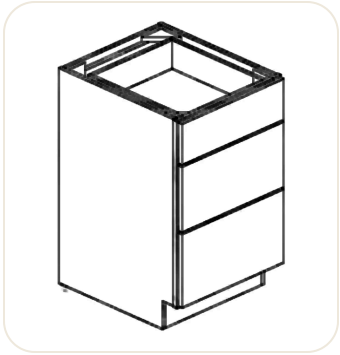

3 Drawer Base

p. 58

SKU	W	H	D
VDB12	12″	34.5″	21″
VDB15	15″	34.5″	21″
VDB18	18″	34.5″	21″
VDB24	24″	34.5″	21″

AVAILABLE MODIFICATIONS

Reduce depth – ½″ increments, min. 12″ · Cut toe kick · Void top drawer · Make bench cabinet (17¼″ Height)

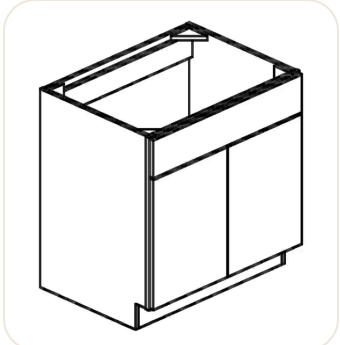

Sink Base With 1 False Drawer

p. 58

SKU	W	H	D
VSB24	24″	34.5″	21″
VSB30	30″	34.5″	21″
VSB36	36″	34.5″	21″

AVAILABLE MODIFICATIONS

Reduce depth – ½″ increments, min. 12″ · Cut toe kick · Ship doors loose

NOTES

- No center stile

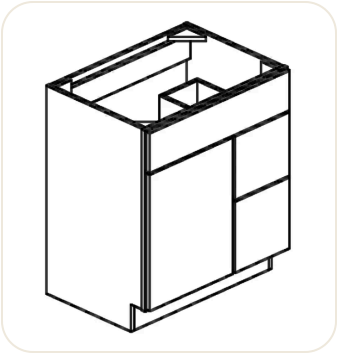

30″ & 36″ Combo Sink Base With 2 Drawers

p. 59

SKU	W	H	D
VSD30L ✱	30″	34.5″	21″
VSD30R ✱	30″	34.5″	21″
VSD36L ✱	36″	34.5″	21″
VSD36R ✱	36″	34.5″	21″

AVAILABLE MODIFICATIONS

Reduce depth – ½″ increments, min. 12″ | Cut toe kick | Void top drawer | Ship door loose

NOTES

- R indicates drawers on the right (shown)
- L indicates drawers on the left
- On both L & R models the door can be hinged right or left
- VSD30L, VSD30R, VSD36L, VSD36R: **Special Order** door styles only (not available in In-Stock styles)

✱ Special availability

- Availability may vary by style and color.
- Please check the ProCraft Cabinetry DC Dealer Portal for availability.
- Reduce depth – ½″ increments, min. 12″
- Cut toe kick
- Void top drawer
- Ship door loose

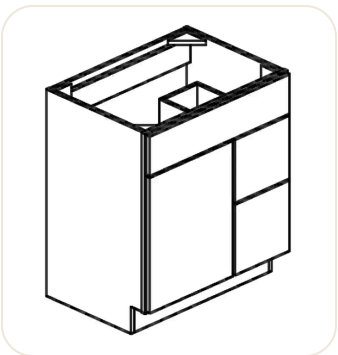

30″ & 36″ Combo Sink Base With Drawers (VSDC)

p. 60

SKU	W	H	D
VSDC30L	30″	34.5″	21″
VSDC30R	30″	34.5″	21″
VSDC36L	36″	34.5″	21″
VSDC36R	36″	34.5″	21″

AVAILABLE MODIFICATIONS

Reduce depth – ½″ increments, min. 12″ | Cut toe kick | Void top drawer | Ship door loose

NOTES

- R indicates drawers on the right (shown)
- L indicates drawers on the left
- On both L & R models the door can be hinged right or left

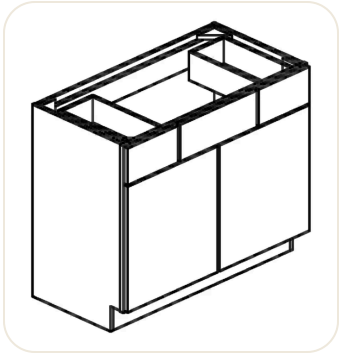

42″ Console Vanity

p. 61

SKU	W	H	D
VSD42	42″	34.5″	21″

AVAILABLE MODIFICATIONS

Reduce depth – ½″ increments, min. 12″ · Cut toe kick · Void top drawer · Ship doors loose

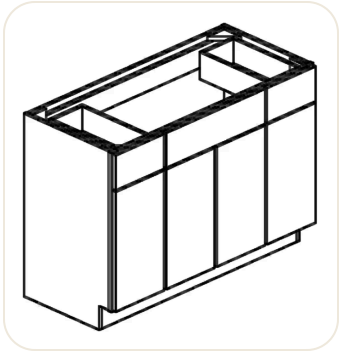

48″ Console Vanity

p. 62

SKU	W	H	D
VSD48	48″	34.5″	21″

AVAILABLE MODIFICATIONS

Reduce depth – ½″ increments, min. 12″ · Cut toe kick · Void top drawer · Ship doors loose

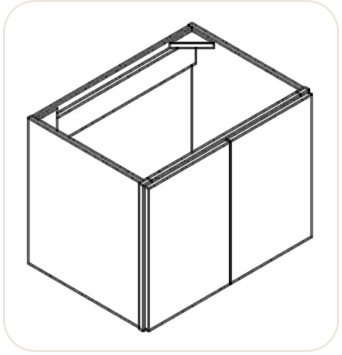

Hanging Sink Base

p. 63

SKU	W	H	D
VHSB24	24″	22.75″	21″
VHSB30	30″	22.75″	21″
VHSB36	36″	22.75″	21″

AVAILABLE MODIFICATIONS

Reduce depth – ½″ increments, min. 12″ · Ship doors loose

NOTES

- You must install these cabinets attached to a stud. It is highly recommended to use support under the cabinet to avoid damage.

Special availability

- These SKUs are only available at select ProCraft Cabinetry locations.
- Availability may vary by style and color.
- Please check the ProCraft Cabinetry DC Dealer Portal for availability.
- Only available in SOW, LSG, LSB, LSW, SSK and SSO.
- For selections that are not available, refer to the “-MOD” SKU.

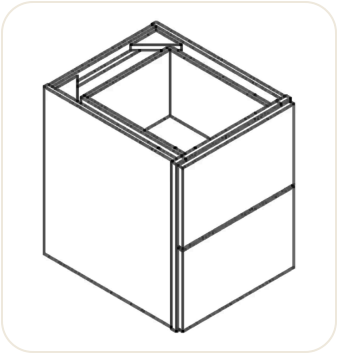

Hanging 2 Drawer Bank

p. 64

SKU	W	H	D
VHDB12	12″	22.75″	21″
VHDB15	15″	22.75″	21″
VHDB18	18″	22.75″	21″
VHDB24	24″	22.75″	21″

AVAILABLE MODIFICATIONS

Reduce depth – ½″ increments, min. 12″ | Void top drawer

NOTES

- You must install these cabinets attached to a stud. It is highly recommended to use support under the cabinet to avoid damage.

Special availability

- These SKUs are only available at select ProCraft Cabinetry locations.
- Availability may vary by style and color.
- Please check the ProCraft Cabinetry DC Dealer Portal for availability.
- Only available in SOW, LSG, LSB, LSW, SSK and SSO.
- For selections that are not available, refer to the “-MOD” SKU.

Hoods

1 page · 2 SKUs

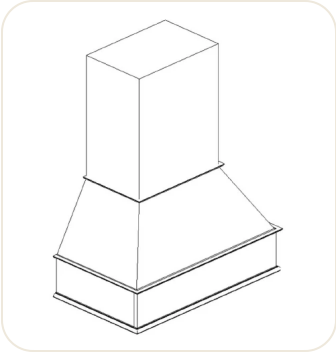

Chimney Hood

p. 66

SKU	W	H	D
CH36	34.5″	53″	24″
CH42	40.5″	53″	24″

MODIFICATIONS

None available

NOTES

- Does not come with a liner. A liner must be purchased separately.
- Ships in 2 boxes. 1 box for the hood section, 1 box for the chimney section.
- CH36 Interior Dimensions: 30.75″ wide, 21.5″ deep, 8″ high
- CH42 Interior Dimensions: 36.75″ wide, 21.5″ deep, 8″ high
- CH(36/42)-Hood = Full Kit
- CH(36/42)-C = Only Chimney
- CH(36/42)-H = Only Hood

Special availability

- These SKUs are only available at select ProCraft Cabinetry locations.
- Availability may vary by style and color.
- Please check the ProCraft Cabinetry DC Dealer Portal for availability.

Accessories

30 pages · 61 SKUs

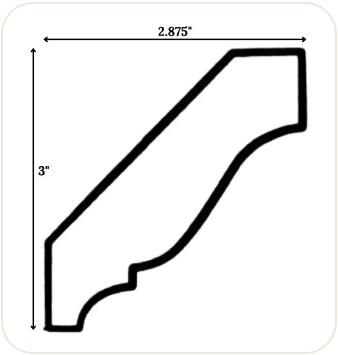

Standard Crown Molding

p. 68

SKU	W	H	D
CM-4	2.875″	3″	96″

MODIFICATIONS

None available

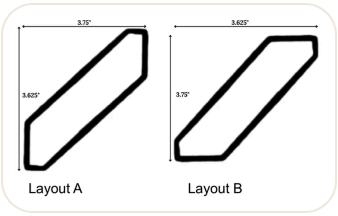

Modern Crown Molding

p. 68

SKU	W	H	D
CMM-4	3.75″	3.625″	96″
CMM-4	3.625″	3.75″	96″

MODIFICATIONS

None available

NOTES

- Can be installed 2 different ways, as shown here.

Special availability

- Availability may vary by style and color.
- Please check the ProCraft Cabinetry DC Dealer Portal for availability. Layout A Layout B

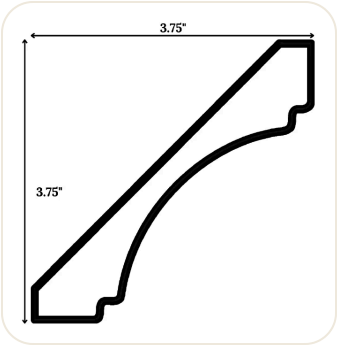

Furniture Crown Molding

p. 68

SKU	W	H	D
FCM	3.75″	3.75″	96″

MODIFICATIONS

None available

Special availability

- Availability may vary by style and color.
- Please check the ProCraft Cabinetry DC Dealer Portal for availability.

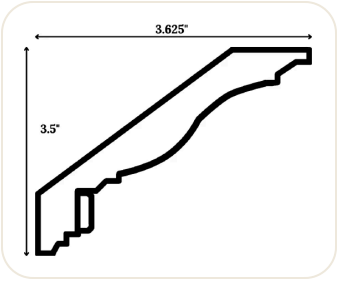

Dentil Crown Molding

p. 69

SKU	W	H	D
DCM	3.625″	3.5″	96″

MODIFICATIONS

None available

Special availability

- Availability may vary by style and color.
- Please check the ProCraft Cabinetry DC Dealer Portal for availability.
- Only available in Arlington Oatmeal (AO).

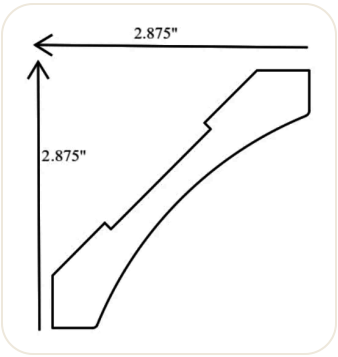

Cove Molding

p. 69

SKU	W	H	D
CVM3	.75″	2.875″	96″

MODIFICATIONS

None available

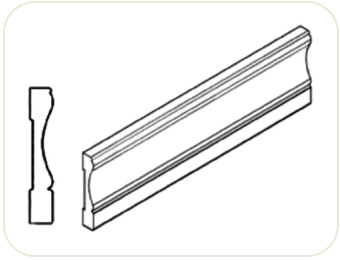

Furniture Base Molding

p. 69

SKU	W	H	D
FBM8	.75″	4.5″	96″

MODIFICATIONS

None available

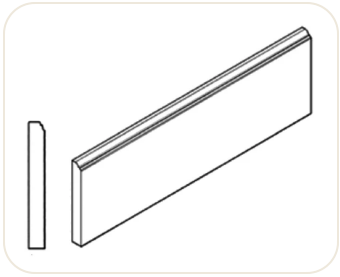

Ogee Base Molding

p. 69

SKU	W	H	D
OBM8	.75″	6″	96″

MODIFICATIONS

None available

Special availability

- Availability may vary by style and color.
- Please check the ProCraft Cabinetry DC Dealer Portal for availability.

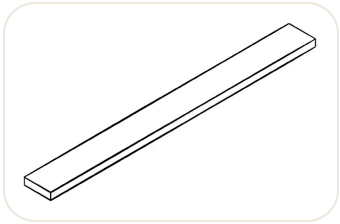

Fillers

p. 70

SKU	W	H	D
WF330	3″	30″	.75″
WF336	3″	36″	.75″
WF342	3″	42″	.75″
WF630	6″	30″	.75″
WF636	6″	36″	.75″
WF642	6″	42″	.75″
TF396	3″	96″	.75″
TF696	6″	96″	.75″

MODIFICATIONS

None available

NOTES

- Finished on all edges.
- Finished on 1 large face.
- The back has color but is not considered a finished side.
- The back may have small holes from the hangers used during finishing.
- WF330 is to be used as a base filler

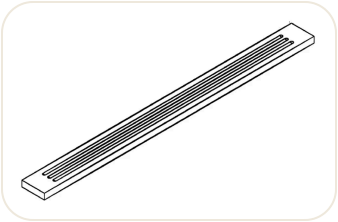

Fluted Fillers

p. 70

SKU	W	H	D
FF330	3″	30″	.75″
FF336	3″	36″	.75″
FF342	3″	42″	.75″
FF396	3″	96″	.75″

MODIFICATIONS

None available

NOTES

- Finished on all edges.
- Finished on 1 large face.
- The back has color but is not considered a finished side.
- The back may have small holes from the hangers used during finishing.
- FF330 is to be used as a base fluted filler

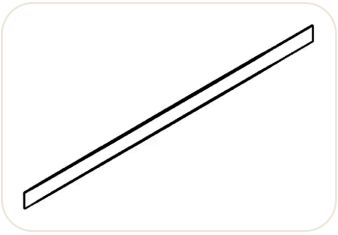

Toe Kick Cover

p. 70

SKU	W	H	D
TK96	96″	4.5″	0.25″

MODIFICATIONS

None available

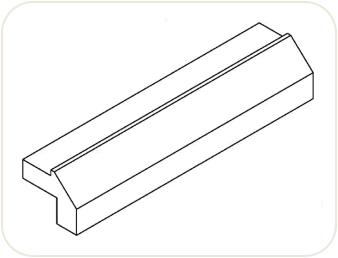

Light Rail A

p. 71

SKU	W	H	D
LBMF	2″	1.625″	96″

MODIFICATIONS

None available

Special availability

- Availability may vary by style and color.
- Please check the ProCraft Cabinetry DC Dealer Portal for availability.

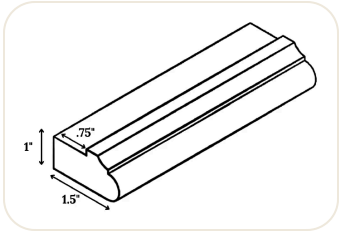

Light Rail B

p. 71

SKU	W	H	D
LVP	1.5″	1″	96″

MODIFICATIONS

None available

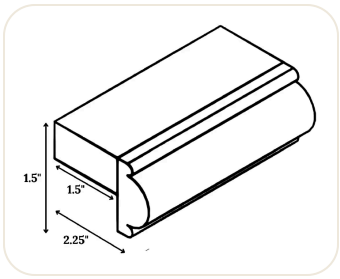

Light Rail C

p. 71

SKU	W	H	D
LVB	2.25″	1.5″	96″

MODIFICATIONS

None available

Special availability

- Availability may vary by style and color.
- Please check the ProCraft Cabinetry DC Dealer Portal for availability.

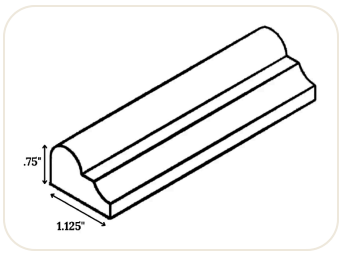

Chair Rail Molding

p. 72

SKU	W	H	D
CR	.75″	1.125″	96″

MODIFICATIONS

None available

Special availability

- Availability may vary by style and color.
- Please check the ProCraft Cabinetry DC Dealer Portal for availability.



Scribe Molding

p. 72

SKU	W	H	D
SC	.25″	.75″	96″

MODIFICATIONS

None available



Batten Molding

p. 73

SKU	W	H	D
BAM	.25″	.75″	96″

MODIFICATIONS

None available



Outside Corner Molding

p. 73

SKU	W	H	D
OCL	.75″	.75″	96″

MODIFICATIONS

None available



Quarter Round Molding

p. 73

SKU	W	H	D
QR	.75″	.75″	96″

MODIFICATIONS

None available

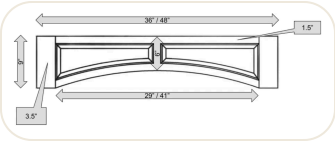

Arch Panel Valance

p. 74

SKU	W	H	D
AVAL36	36″	9″	.75″
AVAL48	48″	9″	.75″

MODIFICATIONS

None available

Special availability

- Availability may vary by style and color.
- Please check the ProCraft Cabinetry DC Dealer Portal for availability.

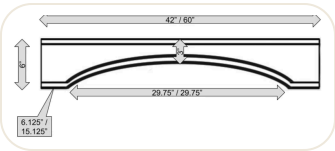

Beaded Valance

p. 74

SKU	W	H	D
GBVAL42	42″	6″	.75″
GBVAL60	60″	6″	.75″

MODIFICATIONS

None available

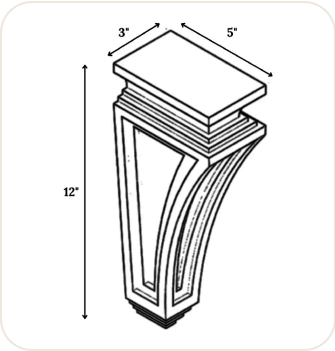

Corbel

p. 74

SKU	W	H	D
CSS	3″	12″	5″

MODIFICATIONS

None available

Special availability

- Availability may vary by style and color.
- Please check the ProCraft Cabinetry DC Dealer Portal for availability.

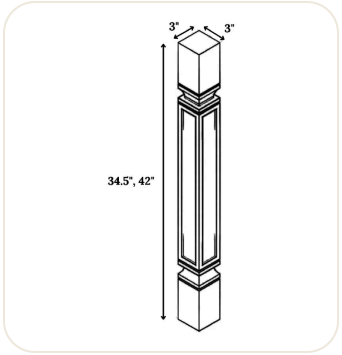

Structural Post

p. 75

SKU	W	H	D
SP34.5	3″	34.5″	3″
SP42	3″	42″	3″

MODIFICATIONS

None available

Special availability

- Availability may vary by style and color.
- Please check the ProCraft Cabinetry DC Dealer Portal for availability.

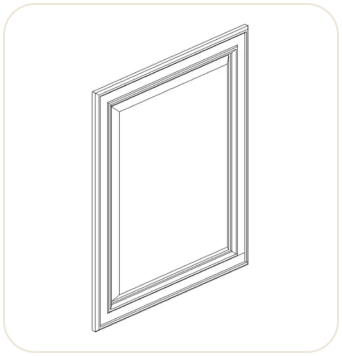

Decorative Door

p. 75

SKU	W	H	D
WDD1230	11.5″	28.9375″	.75″
WDD1236	11.5″	34.9375″	.75″
WDD1242	11.5″	40.9375″	.75″
BDD23.5X30	23.5″	29.25″	.75″

MODIFICATIONS

None available

NOTES

- Decorative doors do not come bored for hinges.
- You can also purchase a “Door & Frame” only from most cabinets and use the door as a decorative door. Example 1: To cover the side of a 36” deep island, you can purchase a W3630 Door & Frame and use the doors. Example 2: To cover the side of a pantry or oven cabinet, you can purchase a TP248424, TP249024, or TP249624 Door & Frame and use the doors.

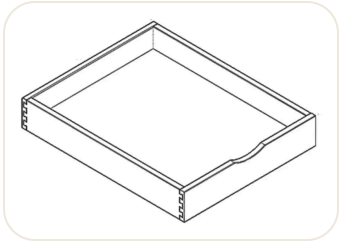

Roll Out Tray

p. 75

SKU	W	H	D
BOX-ROT15	11″	4.25″	21″
BOX-ROT18	14″	4.25″	21″
BOX-ROT21	17″	4.25″	21″
BOX-ROT24	20″	4.25″	21″
BOX-ROT27 *	23″	4.25″	21″
BOX-ROT30	26″	4.25″	21″
BOX-ROT33 *	29″	4.25″	21″
BOX-ROT36	32″	4.25″	21″

AVAILABLE MODIFICATIONS

Reduce depth – ½″ increments, min. 12″

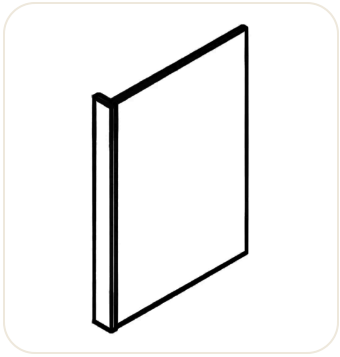

End Panel

p. 76

SKU	W	H	D
BEP3	3″	34.5″	24″
REP1.596 *	1.5″	96″	24″
REP396	3″	96″	24″

MODIFICATIONS

None available

NOTES

- Does not come assembled. You must attach the filler to the panel in the field with included L brackets.
- When ordering REP1.59630 or REP39630 without assembly, contractor must route the groove on the TF396 and cut the BP4896.75 to the desired depth.

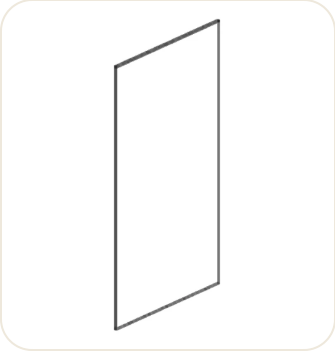

Finished End Skins

p. 76

SKU	W	H	D
WS1230	11.25″	30″	.25″
WS1236	11.25″	36″	.25″
WS1242	11.25″	42″	.25″
BS24	23.25″	34.5″	.25″
TS2496	23.25″	96″	.25″

MODIFICATIONS

None available

NOTES

- Can be ordered loose or installed on cabinets.

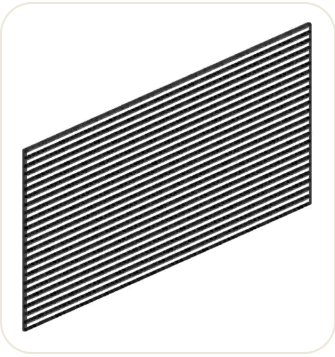

Beaded Panel

p. 76

SKU	W	H	D
BBP4896.25	48″	96″	.25″

MODIFICATIONS

None available

NOTES

- Bead design runs the long 96″ direction.

Special availability

- Availability may vary by style and color.
- Please check the ProCraft Cabinetry DC Dealer Portal for availability.

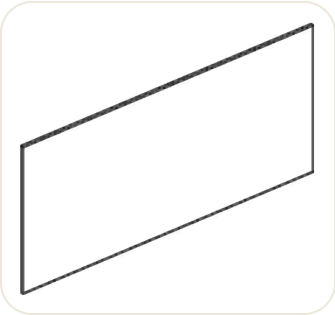

¾″ Finished Panel

p. 77

SKU	W	H	D
BP2496.75	24″	96″	.75″
BP4896.75	48″	96″	.75″

MODIFICATIONS

None available

NOTES

- Both front and back are finished
- All edges are finished

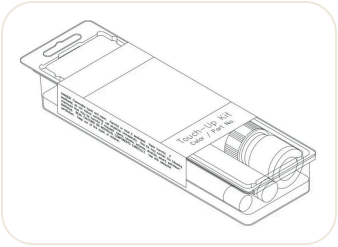

Touch Up Kit

p. 82

SKU	W	H	D
TOUCH UP KIT	n/a	n/a	n/a

MODIFICATIONS

None available

NOTES

- Includes 1 marker and 1 wax fill stick
- Color may not exactly match the cabinet color due to finishing and environmental conditions.
- Touch-up kits are not intended for finishing large areas. They are intended for touching up small scratches, filling nail holes, or coloring molding edges.
- Paint codes are not available. To obtain a similar paint color, bring a door sample to your local Sherwin-Williams and have them use their spectrophotometer to analyze the door and provide the closest match paint color available.



Touch Up Spray Paint

p. 82

SKU	W	H	D
SPRAY PAINT	n/a	n/a	n/a

MODIFICATIONS

None available

NOTES

- 12 oz can
- Color may not exactly match the cabinet color due to finishing and environmental conditions.

Sales Aids & Marketing

1 page · 1 SKUs



11″ x 15″ Sample Doors

p. 86

SKU	W	H	D
SD11X15	11″	15″	.75″

MODIFICATIONS

None available

NOTES

- Sold individually.

Modifications

What each modification means. Each cabinet page lists the ones it allows.

Prep door for glass

- Center panel removed so the door accepts a glass panel
- Specify which door or doors
- Glass is sold separately

Finished interior — wall

- Available on most wall cabinets
- Top, back, sides and shelves finished to match the door

Finished interior — tall

- Available on most tall cabinets
- Top, back, sides and shelves finished to match the door

Increase depth — wall

- Most wall cabinets
- Specify overall depth to the front of the face frame
- 13″ to 24″, in ½″ increments

Increase depth — tall

- Most tall cabinets
- Specify overall depth to the front of the face frame
- Maximum 24″, in ½″ increments

Reduce depth — base

- Most base cabinets
- Specify overall depth to the front of the face frame
- Modified drawer boxes have no dovetail joint at the back
- Minimum 15″, in ½″ increments

Reduce depth — full-height base

- Specify overall depth to the front of the face frame
- Minimum 6″, in ½″ increments

Reduce depth — drawer bases

- Most drawer bases
- Specify overall depth to the front of the face frame
- Modified drawer boxes have no dovetail joint at the back
- Minimum 15″, in ½″ increments

Reduce depth — wall

- Most wall cabinets
- Specify overall depth to the front of the face frame
- Minimum 4″, in ½″ increments

Reduce depth — tall

- Most tall cabinets
- Specify overall depth to the front of the face frame
- Minimum 6″, in ½″ increments

Cut toe kick

- Any base cabinet with a toe kick can be cut from 4½″ down to 0″
- In ½″ increments

Apply finished skin

- Specify right, left or both ends
- Skins fit behind the face frame, flush with the top and bottom of the cabinet

Make bench cabinet

- Top two drawers removed on 3DB, top drawer removed on 2DB
- Remaining drawer: 17¼″ high on 3DB, 21⅛″ on 2DB
- 2″ top reveal

Void blind

- ¼″ panel applied over the blind opening

Void top drawer

- Top drawer removed and its front re-attached to the face frame, like a sink base
- The drawer front can also ship loose

Ship door loose

- Doors are not attached to the cabinet

Five-Year Limited Warranty

For cabinetry purchased on or after January 1, 2019.

ProCraft Cabinetry (“We” or “Us”) warrants to the first Residential Purchaser (“You” or “Your”) a Five-Year Limited Warranty that warrants any product manufactured by Us and sold only in the United States to be free from any unnatural or unavoidable defects under normal residential usage. This warranty is effective for cabinetry purchased on or after January 1, 2019.

Who Is a Residential Purchaser?

- A person who purchases product that is installed in a dwelling owned and used as a primary or secondary home.
- A person or business (builder, contractor or developer) that purchases product and installs it in a dwelling on behalf of the owner. In that case this Limited Warranty may be transferred to the owner if the dwelling is used as their primary or secondary home.

What the Limited Warranty Covers

Door frames, door and drawer fronts, cabinet shelves, roll-out trays, base end panels, cabinet doors, drawer glides, shelving clips, cabinet accessories (toe kick, molding, etc.) and cabinet boxes. We may elect to repair, replace and/or modify, at our discretion, any component We determine to be defective and unable to serve its intended purpose under normal installation, condition and use.

What It Does Not Cover

- Deterioration or discoloration due to normal use
- Natural color variations in stained cabinetry
- Damage caused by improper installation
- Cabinetry or parts used outdoors
- Cabinetry or parts altered or modified from their original purpose, misused, neglected and/or not well maintained
- Damage during transit
- Labor costs associated with a warranty claim (installation and/or removal)
- Transportation and/or installation of defective, repaired and/or replacement products
- Service calls to retrieve defective products from You to Us
- Damage from causes outside our control (flood, fire or other acts of God)
- Cabinets installed in areas outside the recommended storage temperatures (50–85 °F)

Disclaimers

Warped doors

Wood naturally expands and contracts, so a small amount of warping can be expected, and wood often returns to its original form after acclimating. Doors warped up to ¼″, and moldings and panels warped up to 2″, are not considered defective. Doors must hang for at least three months to acclimate before a warranty claim can be filed. Doors that appear warped are often just out of adjustment.

Glazed finishes

Glazed finishes are applied by hand and are designed to look uneven. Some edges may appear heavier or lighter than others, varying door to door, drawer to drawer and item to item. This is not a defect.

Joint splits

Joint splits are unavoidable on painted wood cabinets and are not a defect or a sign of poor quality. As wood moves with seasonal temperature and humidity, the paint can look like it is cracking wherever pieces meet with grain running in different directions — for example where stiles meet rails on doors, at miter joints, and on the face frames around door openings.

Shrinkage of center panels

Center panels may expand and contract as they adjust to temperature and humidity, so defects cannot be judged until three months of settling time have passed. After that, a warranty claim may be filed if shrinkage exceeds ⅛″.

Color & grain variances

Stained cabinets may vary in color, texture and grain. Varied shading is expected and is not a defect. Replacement parts may differ in natural color from the originals.

Hinges and slides

Hardware failure is very uncommon and is most often the result of improper installation or adjustment. Replacement parts may look different from the originals. Before deciding hardware is defective, please review the installation and adjustment instructions.